KIRSCH®
DRAPERY HARDWARE

Designer Metals™

2026 Price Guide

DESIGNER METALS

from concept to completion

One must dare to explore the depth of each layer of the design process, this is how we create works of pure brilliance.

Take a look at our design process and you will see no detail left unnoticed. We start on paper and take from our extensive research to create bold lines and unique textures. We play with combining different materials to evoke visual interest. Pair that with our striking finishes in polished, brushed and matte textures and you get sophisticated styles crafted with care.

CONTENTS

06 Overview

08 1" Finials & Components

21 1⅜" Finials & Components

44 2" Finials & Components

50 Helpful Guides

- 50 Decorative Traverse Rod Overview
- 52 Hollis™ Traverse Rod & Estate™ Traverse Rod Overview
- 54 AMP™ Motorization
- 56 Bracket Spacing & Mount Options
- 63 Calculating Drapery Weight
- 64 1⅜" Decorative Bracket Weight Chart
- 65 Pole Installation, Cutting & Splicing

COLLECTION OVERVIEW

8 **FINISHES**
A dazzling assortment of light and dark

3 **VERSATILE SIZES**
1", 1⅜" & 2"

2 **DECORATIVE TRAVERSE ROD OPTIONS**
1" Hollis™ Traverse Rods
1⅜" & 2" Estate™ Traverse Rods

1 **BRILLIANT COLLECTION**

AMP™ MOTORIZATION COMPATIBLE
Hollis™ Traverse Rods
Estate™ Traverse Rods

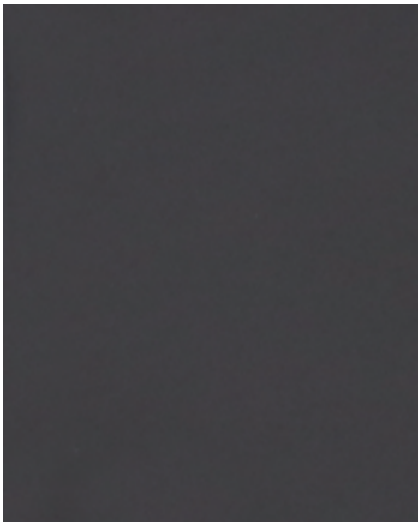

4

7

1	Elegant Brass	5	Polished Nickel
2	Antique Silver	6	Brushed Bronze
3	Gunmetal	7	Gilded Bronze
4	Black	8	Satin Nickel

1

2

3

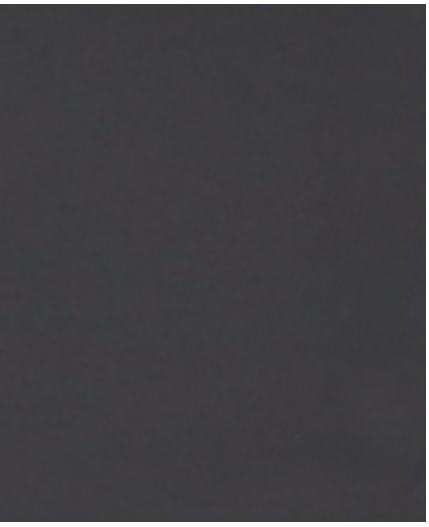
5

6

8

1" Finials

Fitz

Fits	Dimensions	Quantity per Box	Full Pack	Broken Pack
1" Designer Metals™ Poles 1" Hollis™ Traverse Rods	Depth: ¾" Height: $1\frac{7}{32}$" Width: $1\frac{7}{32}$"	4 pairs per box	$18.05	$25.06

Product Number & Finish					
1042991	Antique Silver	**1042997**	Elegant Brass	**1042995**	Polished Nickel
1042992	Black	**1042994**	Gilded Bronze	**1042996**	Satin Nickel
1042993	Brushed Bronze	**1042999**	Gunmetal		

Gavin

Fits	Dimensions	Quantity per Box	Full Pack	Broken Pack
1" Designer Metals™ Poles 1" Hollis™ Traverse Rods	Depth: $2\frac{10}{16}$" Height: $1\frac{7}{32}$" Width: $1\frac{7}{32}$"	4 pairs per box	$25.67	$35.65

Product Number & Finish					
1043033	Antique Silver	**1043039**	Elegant Brass	**1043037**	Polished Nickel
1043034	Black	**1043036**	Gilded Bronze	**1043038**	Satin Nickel
1043035	Brushed Bronze	**1043040**	Gunmetal		

Maxwell

Fits	Dimensions	Quantity per Box	Full Pack	Broken Pack
1" Designer Metals™ Poles 1" Hollis™ Traverse Rods	Depth: 2" Height: 2" Width: 2"	4 pairs per box	$25.67	$35.65

Product Number & Finish					
1043000	Antique Silver	**1043006**	Elegant Brass	**1043004**	Polished Nickel
1043001	Black	**1043003**	Gilded Bronze	**1043005**	Satin Nickel
1043002	Brushed Bronze	**1043007**	Gunmetal		

Maxwell - Duotone

Fits	Dimensions	Quantity per Box	Full Pack	Broken Pack
1" Designer Metals™ Poles 1" Hollis™ Traverse Rods	Depth: 2" Height: 2" Width: 2"	4 pairs per box	$25.67	$35.65

Product Number & Finish	
1043043	Black + Brushed Bronze
1043044	Black + Satin Nickel

1" Finials

Milo

Fits	Dimensions	Quantity per Box	Full Pack	Broken Pack
1" Designer Metals™ Poles 1" Hollis™ Traverse Rods	Depth: 2 1/16" Height:2 1/32" Width: 2 1/32"	4 pairs per box	$25.67	$35.65

Product Number & Finish					
1043008	Antique Silver	**1043014**	Elegant Brass	**1043012**	Polished Nickel
1043009	Black	**1043011**	Gilded Bronze	**1043013**	Satin Nickel
1043010	Brushed Bronze	**1043015**	Gunmetal		

Soren

Fits	Dimensions	Quantity per Box	Full Pack	Broken Pack
1" Designer Metals™ Poles 1" Hollis™ Traverse Rods	Depth: 2½" Height: 2 1/32" Width: 2 1/32"	4 pairs per box	$32.65	$45.35

Product Number & Finish					
1043016	Antique Silver	**1043022**	Elegant Brass	**1043020**	Polished Nickel
1043017	Black	**1043019**	Gilded Bronze	**1043021**	Satin Nickel
1043018	Brushed Bronze	**1043023**	Gunmetal		

Turin

Fits	Dimensions	Quantity per Box	Full Pack	Broken Pack
1" Designer Metals™ Poles 1" Hollis™ Traverse Rods	Depth: 3½" Height: 1¾" Width: 1¾"	4 pairs per box	$32.65	$45.35

Product Number & Finish					
1043025	Antique Silver	**1043031**	Elegant Brass	**1043029**	Polished Nickel
1043026	Black	**1043028**	Gilded Bronze	**1043030**	Satin Nickel
1043027	Brushed Bronze	**1043032**	Gunmetal		

Designer Metals™ | 1" Hollis™ Traverse Rod

To learn more about the technical specs on Hollis™ Traverse Rods and AMP™ Motorization, see pages 50-62.

1" Basic Assembled Set Configurations

Finish Options		
Antique Silver	Elegant Brass	Polished Nickel
Black	Gilded Bronze	Satin Nickel
Brushed Bronze	Gunmetal	

Basic Stationary Rod

Product Number: HOLLIS-BSR-1

Example configuration shown:
Carrier: Pleated
Bracket: Over the Top
Control Option: Stationary
Finish: Black
Finial: Fitz (priced separately)

Carrier Options:

Pleated

Bracket Options:

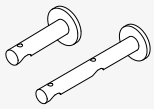

Over the Top

Ceiling

Control Options:

Stationary

Assembled Set Pricing														
Track Size	1.5' to 2'	4'	6'	8'	10'	12'	14'	16'	20'	24'	28'	32'	36'	40'
Price	$90	$180	$270	$360	$450	$540	$630	$720	$900	$1,080	$1,260	$1,440	$1,620	$1,800

Orders over 8 feet will be spliced.

Basic Traverse Rod

Product Number: HOLLIS-BTR-1

Example configuration shown:
Carrier: Pleated
Bracket: Over the Top
Control Option: Motorized
Finish: Gilded Bronze
Finial: None

Carrier Options:

Ripplefold™

Pleated

Bracket Options:

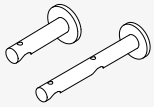

Over the Top

Ceiling

Control Options:

Hand

Basic Baton

Motorized

AMP™ Motorization Upcharge

add $621.00
Charger, item #62201300 included.
Remotes sold separately.

Assembled Set Pricing														
Track Size	1.5' to 2'	4'	6'	8'	10'	12'	14'	16'	20'	24'	28'	32'	36'	40'
Price	$99	$198	$297	$396	$495	$594	$693	$792	$990	$1,188	$1,386	$1,584	$1,782	$1,980
								MOTORIZATION MAXIMUM						

Orders over 8 feet will be spliced. Motorized rods over 8 feet Kirsch recommends a split draw application.

To price a double rod application. Please follow the following steps.
1. Determine what the rod configuration will be for the first rod. Find the price based on the length above.
2. Determine what the rod configuration will be for the second rod. Find the price based on the length above.
3. Add the price of the two rods together to get the total cost of the double rod configuration.
If you are adding motorization to one or both rods, add the AMP Motorization Upcharge of $621.00 per rod.

Designer Metals™ | 1" Hollis™ Traverse Rod

To learn more about the technical specs on Hollis™ Traverse Rods and AMP™ Motorization, see pages 50-62.

1" Premium Assembled Set Configurations

Finish Options		
Antique Silver	Elegant Brass	Polished Nickel
Black	Gilded Bronze	Satin Nickel
Brushed Bronze	Gunmetal	

Premium Stationary Rod or Stationary Bypass Rod

Product Number: HOLLIS-PSR-1

Example configuration shown:
Carrier: Ring Assembly
Bracket: Hidden
Control Option: Hand
Finish: Antique Silver
Finial: Milo (priced separately)

Carrier Options:

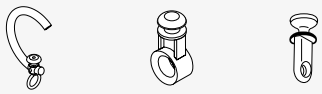

Ring Assembly | Ripplefold™ | Pleated

Bracket Options:

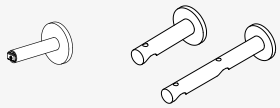

Hidden | Over the Top

Control Options:

Stationary | Hand | Decorative Baton

*Note: When using the Ring Assembly Carriers and the Over the Top brackets, the draperies cannot be operated.

Assembled Set Pricing

Track Size	1.5' to 2'	4'	6'	8'	10'	12'	14'	16'	20'	24'	28'	32'	36'	40'
Price	$119	$238	$356	$475	$594	$713	$832	$950	$1,188	$1,426	$1,663	$1,901	$2,138	$2,376

Orders over 8 feet will be spliced.

Premium Traverse Rod

Product Number: HOLLIS-PTR-1

Example configuration shown:
Carrier: Pleated
Bracket: Ceiling
Control Option: Motorized
Finish: Gunmetal
Finial: None

Carrier Options:

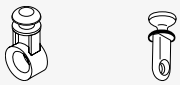

Ripplefold™ | Pleated

Bracket Options:

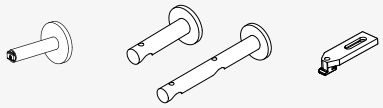

Hidden | Over the Top | Ceiling

Control Options:

Decorative Baton | Motorized

AMP™ Motorization Upcharge

add $621.00
Charger, item #62201300 included.
Remotes sold separately.

Assembled Set Pricing

Track Size	1.5' to 2'	4'	6'	8'	10'	12'	14'	16'	20'	24'	28'	32'	36'	40'
Price	$119	$238	$356	$475	$594	$713	$832	$950	$1,188	$1,426	$1,663	$1,901	$2,138	$2,376
								MOTORIZATION MAXIMUM						

Orders over 8 feet will be spliced. Motorized rods over 8 feet Kirsch recommends a split draw application.

To price a double rod application. Please follow the following steps.
1. Determine what the rod configuration will be for the first rod. Find the price based on the length above.
2. Determine what the rod configuration will be for the second rod. Find the price based on the length above.
3. Add the price of the two rods together to get the total cost of the double rod configuration.
If you are adding motorization to one or both rods, add the AMP Motorization Upcharge of $621.00 per rod.

1" Hollis™ Traverse Rod Components

To learn more about the technical specs on Hollis™ Traverse Rods and AMP™ Motorization, see pages 50-62.

Item	Product No. & Finish		Description	Quantity Per Box	Full Pack Price	Broken Pack Price
	62101000 **62101010**	White Black	AMP Remote Control RF 2W 15 Channel	1 piece per box	$47.85	n/a
	62201300	White	AMP Battery Charger 16.5V/0.89A	1 piece per box	$20.20	n/a
	62102000	White	AMP Gateway USB Bridge	1 piece per box	$141.33	n/a
	62109000	White	AMP Wall Switch Surface RF 2W 15 Channel	1 piece per box	$61.75	n/a
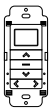	**62108000**	White	AMP Wall Switch RF 2W 15 Channel	1 piece per box	$38.59	n/a
	1026660		15" Cable Assembly	10 pieces per box	$6.57	n/a
	1026661		4' Cable Assembly	10 pieces per box	$7.40	n/a
	1026662		10' Cable Assembly	10 pieces per box	$11.01	n/a
	1026663		20' Cable Assembly	10 pieces per box	$15.93	n/a

Hollis™ Traverse Rod Options

	Basic Stationary Rod	Basic Traverse Rod	Premium Stationary Rod or Stationary Bypass Rod	Premium Traverse Rod
Pleated	●	●	●	●
Ripplefold™		●	●	●
Ring Assembly			●	
Ceiling Bracket*	●	●		●
Over the Top Bracket	●	●	●	●
Double Over the Top Bracket	●	●	●	●
Hidden Bracket			●	●
Basic Baton		●		
Decorative Designer Metals™ Baton			●	●
Motorized		●		●

*Only the Fitz finial can be used on ceiling mounted Hollis™ Traverse Rods.

Hollis™ Traverse Rod

Designer Metals™
Set in Antique Silver
Pleated Carriers
Ceiling Bracket

Designer Metals™
Set in Black
Pleated Carriers
Double Over the Top Bracket

Hollis™ Traverse Rod | Milo in Brushed Bronze
Over the Top Bracket

1" Stationary Poles

4' Fixed Width Pole

Diameter	Length	Quantity per Box	Full Pack	Broken Pack
1"	4'	9 pieces per box	$17.76	$24.67

Product Number & Finish					
1042663	Antique Silver	**1042669**	Elegant Brass	**1042667**	Polished Nickel
1042664	Black	**1042666**	Gilded Bronze	**1042668**	Satin Nickel
1042665	Brushed Bronze	**1042670**	Gunmetal		

Finial plugs included.
Brackets sold separately.

6' Fixed Width Pole

Diameter	Length	Quantity per Box	Full Pack	Broken Pack
1"	6'	9 pieces per box	$22.92	$31.83

Product Number & Finish					
1042671	Antique Silver	**1042677**	Elegant Brass	**1042675**	Polished Nickel
1042672	Black	**1042674**	Gilded Bronze	**1042676**	Satin Nickel
1042673	Brushed Bronze	**1042678**	Gunmetal		

Finial plugs included.
Brackets sold separately.

8' Fixed Width Pole

Diameter	Length	Quantity per Box	Full Pack	Broken Pack
1"	8'	9 pieces per box	$30.36	$42.17

Product Number & Finish					
1042679	Antique Silver	**1042686**	Elegant Brass	**1042684**	Polished Nickel
1042680	Black	**1042682**	Gilded Bronze	**1042685**	Satin Nickel
1042681	Brushed Bronze	**1042687**	Gunmetal		

Finial plugs included.
Brackets sold separately.

Internal Rod Splice

Fits	Quantity per Box	Full Pack	Broken Pack
1" Designer Metals™ Poles	8 pieces per box	$2.41	$3.34

Product Number & Finish	
1042812	Bright Zinc

Connects two poles together for larger width options.

Finial Plug

Fits	Quantity per Box	Full Pack	Broken Pack
1" Designer Metals™ Poles	20 pieces per box	$2.41	$3.34

Product Number & Finish	
1048637	White

Can be used with stationary fixed width rods.

1" Rings

Ring

Fits	Dimensions	Quantity per Box	Full Pack	Broken Pack
1" Designer Metals™ Poles	Internal: 1⅜" External: 1 11/16" External to eyelet: 2"	4 boxes per carton - 7 rings in each box	$17.19	$23.88

Product Number & Finish					
1042771	Antique Silver	**1042777**	Elegant Brass	**1042775**	Polished Nickel
1042772	Black	**1042774**	Gilded Bronze	**1042776**	Satin Nickel
1042773	Brushed Bronze	**1042778**	Gunmetal		

Bypass C-Ring

Fits	Dimensions	Quantity per Box	Full Pack	Broken Pack
1" Designer Metals™ Poles	Internal: 1⅜" External: 1 11/16" External to eyelet: 2"	4 boxes per carton - 7 rings in each box	$14.89	$20.69

Product Number & Finish					
1042779	Antique Silver	**1042785**	Elegant Brass	**1042783**	Polished Nickel
1042780	Black	**1042782**	Gilded Bronze	**1042784**	Satin Nickel
1042781	Brushed Bronze	**1042786**	Gunmetal		

Lock Ring

Fits	Dimensions	Quantity per Box	Full Pack	Broken Pack
1" Designer Metals™ Poles with French Returns	Internal: 1 1/16" External: 1⅞" External to eyelet: 2 5/16"	8 bags per carton - 1 ring in each bag	$11.35	$15.77

Product Number & Finish					
1042763	Antique Silver	**1042769**	Elegant Brass	**1042767**	Polished Nickel
1042764	Black	**1042766**	Gilded Bronze	**1042768**	Satin Nickel
1042765	Brushed Bronze	**1042770**	Gunmetal		

Clips

Fits	Quantity per Box	Full Pack	Broken Pack
Designer Metals™ Rings	7 bags per carton - 7 clips in each bag	$5.16	$7.16

Product Number & Finish					
1044010	Antique Silver	**1044013**	Elegant Brass	**1044017**	Polished Nickel
1044016	Black	**1044012**	Gilded Bronze	**1044011**	Satin Nickel
1044015	Brushed Bronze	**1044014**	Gunmetal		

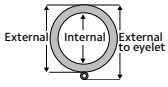

Use the measurement guide to the left to help determine the correct dimensions for your selected product.

1" Brackets

3" Return O Bracket

Weight limit per bracket for 3" returns is 25 lbs.

Fits	Dimensions	Quantity per Box	Full Pack	Broken Pack
1" Designer Metals™ Poles	Depth: 3 11/16" Height: 2 3/16" Width: 2 3/16" Wall to Pole: 2 3/8" Return: 3"	10 pieces per box	$17.57	$24.40

Product Number & Finish					
1042918	Antique Silver	**1042924**	Elegant Brass	**1042922**	Polished Nickel
1042919	Black	**1042921**	Gilded Bronze	**1042923**	Satin Nickel
1042920	Brushed Bronze	**1042925**	Gunmetal		

6" Return O Bracket

Weight limit per bracket for 6" returns is 12 lbs.

Fits	Dimensions	Quantity per Box	Full Pack	Broken Pack
1" Designer Metals™ Poles	Depth: 6 11/16" Height: 2 3/16" Width: 2 3/16" Wall to Pole: 5 3/8" Return: 6"	10 pieces per box	$21.38	$29.71

Product Number & Finish					
1042926	Antique Silver	**1042932**	Elegant Brass	**1042930**	Polished Nickel
1042927	Black	**1042929**	Gilded Bronze	**1042931**	Satin Nickel
1042928	Brushed Bronze	**1042933**	Gunmetal		

3" Return Bypass O Bracket

Weight limit per bracket for 3" returns is 25 lbs.

Fits	Dimensions	Quantity per Box	Full Pack	Broken Pack
1" Designer Metals™ Poles	Depth: 3½" Height: 2 3/16" Width: 2 3/16" Wall to Pole: 2 3/8" Return: 3"	10 pieces per box	$17.57	$24.40

Product Number & Finish					
1042934	Antique Silver	**1042940**	Elegant Brass	**1042938**	Polished Nickel
1042935	Black	**1042937**	Gilded Bronze	**1042939**	Satin Nickel
1042936	Brushed Bronze	**1042941**	Gunmetal		

6" Return Bypass O Bracket

Weight limit per bracket for 6" returns is 12 lbs.

Fits	Dimensions	Quantity per Box	Full Pack	Broken Pack
1" Designer Metals™ Poles	Depth: 6½" Height: 2 3/16" Width: 2 3/16" Wall to Pole: 5 3/8" Return: 6"	10 pieces per box	$21.38	$29.71

Product Number & Finish					
1042942	Antique Silver	**1042948**	Elegant Brass	**1042946**	Polished Nickel
1042943	Black	**1042945**	Gilded Bronze	**1042947**	Satin Nickel
1042944	Brushed Bronze	**1042949**	Gunmetal		

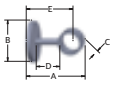

Use the measurement guide to the left to help determine the correct dimensions for your selected product.

Hollis™ Traverse Rod | Designer Metals™
Turin in Elegant Brass
Pleated Carriers
Over the Top Bracket

1" French Returns

3" French Return - Left

Weight Limit for 3" French Returns is 25 lbs - wall mounted only

Fits	Dimensions	Quantity per Box	Full Pack	Broken Pack
1" Designer Metals™ Poles	Arm Width: 3¼" Overall Width: 4⅜" Back Plate Width: 2⅛" Return: 3"	4 pieces per box	$43.92	$61.01

Product Number & Finish					
1042854	Antique Silver	**1042860**	Elegant Brass	**1042858**	Polished Nickel
1042855	Black	**1042857**	Gilded Bronze	**1042859**	Satin Nickel
1042856	Brushed Bronze	**1042861**	Gunmetal		

3" French Return - Right

Weight Limit for 3" French Returns is 25 lbs - wall mounted only

Fits	Dimensions	Quantity per Box	Full Pack	Broken Pack
1" Designer Metals™ Poles	Arm Width: 3¼" Overall Width: 4⅜" Back Plate Width: 2⅛" Return: 3"	4 pieces per box	$43.92	$61.01

Product Number & Finish					
1042862	Antique Silver	**1042868**	Elegant Brass	**1042866**	Polished Nickel
1042863	Black	**1042865**	Gilded Bronze	**1042867**	Satin Nickel
1042864	Brushed Bronze	**1042869**	Gunmetal		

6" French Return - Left

Weight Limit for 6" French Returns is 12 lbs - wall mounted only

Fits	Dimensions	Quantity per Box	Full Pack	Broken Pack
1" Designer Metals™ Poles	Arm Width: 3¼" Overall Width: 4⅜" Back Plate Width: 2⅛" Return: 6"	4 pieces per box	$43.92	$61.01

Product Number & Finish					
1042870	Antique Silver	**1042876**	Elegant Brass	**1042874**	Polished Nickel
1042871	Black	**1042873**	Gilded Bronze	**1042875**	Satin Nickel
1042872	Brushed Bronze	**1042877**	Gunmetal		

6" French Return - Right

Weight Limit for 6" French Returns is 12 lbs - wall mounted only

Fits	Dimensions	Quantity per Box	Full Pack	Broken Pack
1" Designer Metals™ Poles	Arm Width: 3¼" Overall Width: 4⅜" Back Plate Width: 2⅛" Return: 6"	4 pieces per box	$43.92	$61.01

Product Number & Finish					
1042878	Antique Silver	**1042884**	Elegant Brass	**1042882**	Polished Nickel
1042879	Black	**1042881**	Gilded Bronze	**1042883**	Satin Nickel
1042880	Brushed Bronze	**1042885**	Gunmetal		

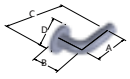

Use the measurement guide to the left to help determine the correct dimensions for your selected product.

1⅜" Finials & Endcaps

Archer

Fits	Dimensions	Quantity per Box	Full Pack	Broken Pack
1⅜" Designer Metals™ Poles 1⅜" Estate™ Traverse Rods	Depth: 4" Height: 3 3/16" Width: 3 3/16"	4 pairs per box	$35.71	$49.59

Product Number & Finish					
1042982	Antique Silver	**1042989**	Elegant Brass	**1042986**	Polished Nickel
1042983	Black	**1042985**	Gilded Bronze	**1042988**	Satin Nickel
1042984	Brushed Bronze	**1042990**	Gunmetal		

Briggs

Fits	Dimensions	Quantity per Box	Full Pack	Broken Pack
1⅜" Designer Metals™ Poles 1⅜" Estate™ Traverse Rods	Depth: 3 7/16" Height: 2¾" Width: 2¾"	4 pairs per box	$35.71	$49.59

Product Number & Finish					
1042958	Antique Silver	**1042964**	Elegant Brass	**1042962**	Polished Nickel
1042959	Black	**1042961**	Gilded Bronze	**1042963**	Satin Nickel
1042960	Brushed Bronze	**1042965**	Gunmetal		

Briggs - Duotone

Fits	Dimensions	Quantity per Box	Full Pack	Broken Pack
1⅜" Designer Metals™ Poles 1⅜" Estate™ Traverse Rods	Depth: 3 7/16" Height: 2¾" Width: 2¾"	4 pairs per box	$35.71	$49.59

Product Number & Finish	
1043041	Black + Brushed Bronze
1043042	Black + Satin Nickel

Corsa

Fits	Dimensions	Quantity per Box	Full Pack	Broken Pack
1⅜" Designer Metals™ Poles 1⅜" Estate™ Traverse Rods	Depth: 1⅝" Height: 2½" Width: 2½"	4 pairs per box	$20.04	$27.84

Product Number & Finish					
1831904	Antique Silver	**1043899**	Elegant Brass	**1831957**	Polished Nickel
1831921	Black	**1831906**	Gilded Bronze	**1831905**	Satin Nickel
1831907	Brushed Bronze	**1043943**	Gunmetal		

1⅜" Finials & Endcaps

Elmore

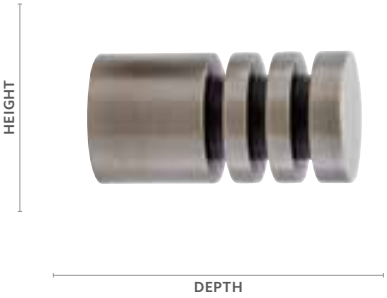

Fits	Dimensions	Quantity per Box	Full Pack	Broken Pack
1⅜" Designer Metals™ Poles 1⅜" Estate™ Traverse Rods	Depth: 3" Height: 1½" Width: 1½"	4 pairs per box	$35.71	$49.59

Product Number & Finish					
1832170	Antique Silver	**1043900**	Elegant Brass	**1832176**	Polished Nickel
1832171	Black	**1832174**	Gilded Bronze	**1832177**	Satin Nickel
1832172	Brushed Bronze	**1043944**	Gunmetal		

Emerson

Fits	Dimensions	Quantity per Box	Full Pack	Broken Pack
1⅜" Designer Metals™ Poles 1⅜" Estate™ Traverse Rods	Depth: 2⅞" Height: 2⅜" Width: 2⅜"	4 pairs per box	$55.72	$77.38

Product Number & Finish					
1042974	Antique Silver	**1042980**	Elegant Brass	**1042978**	Polished Nickel
1042975	Black	**1042977**	Gilded Bronze	**1042979**	Satin Nickel
1042976	Brushed Bronze	**1042981**	Gunmetal		

Europa

Fits	Dimensions	Quantity per Box	Full Pack	Broken Pack
1⅜" Designer Metals™ Poles 1⅜" Estate™ Traverse Rods	Depth: 3" Height: 2⅜" Width: 2⅜"	4 pairs per box	$55.72	$77.38

Product Number & Finish					
1831715	Antique Silver	**1043901**	Elegant Brass	**1831963**	Polished Nickel
1831717	Black	**1831960**	Gilded Bronze	**1831962**	Satin Nickel
1831958	Brushed Bronze	**1043945**	Gunmetal		

Harlow

Fits	Dimensions	Quantity per Box	Full Pack	Broken Pack
1⅜" Designer Metals™ Poles 1⅜" Estate™ Traverse Rods	Depth: 4" Height: 1¾" Width: 1¾"	4 pairs per box	$55.72	$77.38

Product Number & Finish					
1832146	Antique Silver	**1043902**	Elegant Brass	**1832152**	Polished Nickel
1832147	Black	**1832150**	Gilded Bronze	**1832153**	Satin Nickel
1832148	Brushed Bronze	**1043946**	Gunmetal		

1⅜" Finials & Endcaps

Lenn

Fits	Dimensions	Quantity per Box	Full Pack	Broken Pack
1⅜" Designer Metals™ Poles 1⅜" Estate™ Traverse Rods	Depth: 1 15/16" Height: 3" Width: 3"	4 pairs per box	$55.72	$77.38

Product Number & Finish					
1042051	Antique Silver	**1042058**	Elegant Brass	**1042055**	Polished Nickel
1042052	Black	**1042054**	Gilded Bronze	**1042057**	Satin Nickel
1042053	Brushed Bronze	**1042059**	Gunmetal		

Odessa

Fits	Dimensions	Quantity per Box	Full Pack	Broken Pack
1⅜" Designer Metals™ Poles 1⅜" Estate™ Traverse Rods	Depth: 3 7/32" Height: 2 7/16" Width: 2 7/16"	4 pairs per box	$55.72	$77.38

Product Number & Finish					
1042950	Antique Silver	**1042956**	Elegant Brass	**1042954**	Polished Nickel
1042951	Black	**1042953**	Gilded Bronze	**1042955**	Satin Nickel
1042952	Brushed Bronze	**1042957**	Gunmetal		

Pandora

Fits	Dimensions	Quantity per Box	Full Pack	Broken Pack
1⅜" Designer Metals™ Poles 1⅜" Estate™ Traverse Rods	Depth: 4" Height: 2¾" Width: 2¾"	4 pairs per box	$28.52	$39.60

Product Number & Finish					
1831705	Antique Silver	**1043903**	Elegant Brass	**1831966**	Polished Nickel
1831712	Black	**1831707**	Gilded Bronze	**1831706**	Satin Nickel
1831708	Brushed Bronze	**1043947**	Gunmetal		

Quinn

Fits	Dimensions	Quantity per Box	Full Pack	Broken Pack
1⅜" Designer Metals™ Poles 1⅜" Estate™ Traverse Rods	Depth: 3 3/16" Height: 2 7/16" Width: 2 7/16"	4 pairs per box	$35.71	$49.59

Product Number & Finish					
1042966	Antique Silver	**1042972**	Elegant Brass	**1042970**	Polished Nickel
1042967	Black	**1042969**	Gilded Bronze	**1042971**	Satin Nickel
1042968	Brushed Bronze	**1042973**	Gunmetal		

1⅜" Finials

Rao

Fits	Dimensions	Quantity per Box	Full Pack	Broken Pack
1⅜" Designer Metals™ Poles 1⅜" Estate™ Traverse Rods	Depth: ⅞" Height: 1⅞" Width: 1⅞"	4 pairs per box	$20.04	$27.84

Product Number & Finish					
1831883	Antique Silver	**1043904**	Elegant Brass	**1831967**	Polished Nickel
1831890	Black	**1831885**	Gilded Bronze	**1831884**	Satin Nickel
1831886	Brushed Bronze	**1043948**	Gunmetal		

Stratta

Fits	Dimensions	Quantity per Box	Full Pack	Broken Pack
1⅜" Designer Metals™ Poles 1⅜" Estate™ Traverse Rods	Depth: 2¼" Height: 2⅝" Width: 2⅝"	4 pairs per box	$35.71	$49.59

Product Number & Finish					
1831634	Antique Silver	**1043905**	Elegant Brass	**1831968**	Polished Nickel
1831663	Black	**1831598**	Gilded Bronze	**1831635**	Satin Nickel
1831599	Brushed Bronze	**1043949**	Gunmetal		

Vivien

Fits	Dimensions	Quantity per Box	Full Pack	Broken Pack
1⅜" Designer Metals™ Poles 1⅜" Estate™ Traverse Rods	Depth: 3⅝" Height: 2⅝" Width: 2⅝"	4 pairs per box	$55.72	$77.38

Product Number & Finish					
1832186	Antique Silver	**1043906**	Elegant Brass	**1832192**	Polished Nickel
1832187	Black	**1832190**	Gilded Bronze	**1832193**	Satin Nickel
1832188	Brushed Bronze	**1043950**	Gunmetal		

1⅜" Endcaps

Round Endcap

Fits	Dimensions	Quantity per Box	Full Pack	Broken Pack
1⅜" Designer Metals™ Poles 1⅜" Estate™ Traverse Rods	Depth: 1⅛" Height: 1½" Width: 1½"	4 pairs per box	$20.04	$27.84

Product Number & Finish					
1832162	Antique Silver	**1043896**	Elegant Brass	**1832168**	Polished Nickel
1832163	Black	**1832166**	Gilded Bronze	**1832169**	Satin Nickel
1832164	Brushed Bronze	**1043940**	Gunmetal		

Square Endcap

Fits	Dimensions	Quantity per Box	Full Pack	Broken Pack
1⅜" Designer Metals™ Poles 1⅜" Estate™ Traverse Rods	Depth: 1⅝" Height: 1⅝" Width: 1⅝"	4 pairs per box	$28.52	$39.60

Product Number & Finish					
1832154	Antique Silver	**1043897**	Elegant Brass	**1832160**	Polished Nickel
1832155	Black	**1832158**	Gilded Bronze	**1832161**	Satin Nickel
1832156	Brushed Bronze	**1043941**	Gunmetal		

1⅜" Estate™ Traverse Rod | Odessa in Elegant Brass

Quinn in Elegant Brass
Odessa in Black

1⅜" Estate™ Traverse Rod

To learn more about the technical specs on Estate™ Traverse Rods and AMP™ Motorization, see pages 50-62.

1⅜" Assembled Set Configurations

Assembled Set with Slides - Manual Traversing Rod

Unit of Measure	Dealer Cost
Foot	$47.00

Orders over 8 feet will be spliced. A Keystone will be provided to cover the splice.

AMP™ Motorization Upcharge	add $621.00

Charger, item #62201300 included. Remotes sold separately.

Product Number & Finish					
83687867	Antique Silver	**83687925**	Elegant Brass	**83687924**	Polished Nickel
83687922	Black	**83687920**	Gilded Bronze	**83687923**	Satin Nickel
83687919	Brushed Bronze	**83687926**	Gunmetal		

Assembled Set with Wheeled Ripplefold™ Carriers - Manual Traversing Rod

Unit of Measure	Dealer Cost
Foot	$47.00

Orders over 8 feet will be spliced. A Keystone will be provided to cover the splice.

AMP™ Motorization Upcharge	add $621.00

Charger, item #62201300 included. Remotes sold separately.

Product Number & Finish					
83688867	Antique Silver	**83688925**	Elegant Brass	**83688924**	Polished Nickel
83688922	Black	**83688920**	Gilded Bronze	**83688923**	Satin Nickel
83688919	Brushed Bronze	**83688926**	Gunmetal		

1⅜" Estate™ Keystone

Fits	Quantity per Box	Full Pack	Broken Pack
1⅜" Designer Metals Estate™ Traverse Rods	25 pieces per box	$9.83	$13.65

Product Number & Finish					
1832226	Antique Silver	**1043926**	Elegant Brass	**1832232**	Polished Nickel
1832227	Black	**1832230**	Gilded Bronze	**1832233**	Satin Nickel
1832228	Brushed Bronze	**1043969**	Gunmetal		

Double Bracket

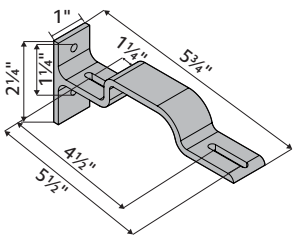

Fits	Dimensions	Quantity per Box	Full Pack	Broken Pack
1⅜" Estate™ Traverse Rods 2" Estate™ Traverse Rods	Depth: 5¾" Height: 2¼" Width: 1"	10 pieces per box	$21.25	$29.50

Product Number & Finish	
71134110	Satin Brass

* Assembled sets do not include finials. Additional slides can be ordered at a charge. Otherwise, a standard set includes 4 slides per foot.

1⅜" Estate™ Traverse Rod Components

To learn more about the technical specs on Estate™ Traverse Rods and AMP™ Motorization, see pages 50-62.

Double Bracket

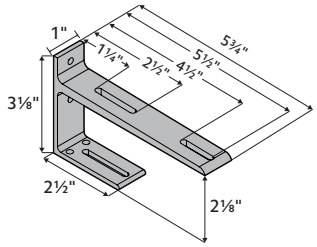

Fits	Dimensions	Quantity per Box	Full Pack	Broken Pack
1⅜" Estate™ Traverse Rods 2" Estate™ Traverse Rods	Depth: 5¾" Height: 3⅛" Width: 1"	10 pieces per box	$22.17	$30.79

Product Number & Finish			
71132062	Antique Brass	**71132110**	Satin Brass
71132006	Black	**71132012**	Satin Nickel

Item	Product No. & Finish		Description	Quantity Per Box	Full Pack Price	Broken Pack Price
	62101000 **62101010**	White Black	AMP Remote Control RF 2W 15 Channel	1 piece per box	$47.85	n/a
	62201300	White	AMP Battery Charger 16.5V/0.89A	1 piece per box	$20.20	n/a
	62102000	White	AMP Gateway USB Bridge	1 piece per box	$141.33	n/a
	62109000	White	AMP Wall Switch Surface RF 2W 15 Channel	1 piece per box	$61.75	n/a
	62108000	White	AMP Wall Switch RF 2W 15 Channel	1 piece per box	$38.59	n/a
	1026660		15" Cable Assembly	10 pieces per box	$6.57	n/a
	1026661		4' Cable Assembly	10 pieces per box	$7.40	n/a
	1026662		10' Cable Assembly	10 pieces per box	$11.01	n/a
	1026663		20' Cable Assembly	10 pieces per box	$15.93	n/a

1⅜" Stationary Poles

4' Fixed Width Pole

Diameter	Length	Quantity per Box	Full Pack	Broken Pack
1⅜"	4'	4 pieces per box	$19.10	$26.52

Product Number & Finish					
1042257	Antique Silver	**1042653**	Elegant Brass	**1042651**	Polished Nickel
1042258	Black	**1042650**	Gilded Bronze	**1042652**	Satin Nickel
1042259	Brushed Bronze	**1042654**	Gunmetal		

Finial plugs included.
Brackets sold separately.

6' Fixed Width Pole

Diameter	Length	Quantity per Box	Full Pack	Broken Pack
1⅜"	6'	4 pieces per box	$24.06	$33.42

Product Number & Finish					
1042655	Antique Silver	**1042661**	Elegant Brass	**1042659**	Polished Nickel
1042656	Black	**1042658**	Gilded Bronze	**1042660**	Satin Nickel
1042657	Brushed Bronze	**1042662**	Gunmetal		

Finial plugs included.
Brackets sold separately.

8' Fixed Width Pole

Diameter	Length	Quantity per Box	Full Pack	Broken Pack
1⅜"	8'	4 pieces per box	$32.22	$44.75

Product Number & Finish					
1832019	Antique Silver	**1043911**	Elegant Brass	**1832023PN**	Polished Nickel
1832026	Black	**1832021**	Gilded Bronze	**1832020**	Satin Nickel
1832022	Brushed Bronze	**1043955**	Gunmetal		

Finial plugs included.
Brackets sold separately.

1⅜" Telescoping Poles

36"-66" Telescoping Pole

Diameter	Length	Quantity per Box	Full Pack	Broken Pack
1⅜"	36"-66"	4 pieces per box	$36.07	$50.10

Product Number & Finish					
1831267	Antique Silver	**1043909**	Elegant Brass	**1831977**	Polished Nickel
1831456	Black	**1831451**	Gilded Bronze	**1831269**	Satin Nickel
1831452	Brushed Bronze	**1043953**	Gunmetal		

Finial plugs included.
3 standard brackets included.

66"-120" Telescoping Pole

Diameter	Length	Quantity per Box	Full Pack	Broken Pack
1⅜"	66"-120"	4 pieces per box	$51.86	$72.03

Product Number & Finish					
1831458	Antique Silver	**1043910**	Elegant Brass	**1831978**	Polished Nickel
1831465	Black	**1831460**	Gilded Bronze	**1831459**	Satin Nickel
1831461	Brushed Bronze	**1043954**	Gunmetal		

Finial plugs included.
4 standard brackets included.

120"-180" Telescoping Pole

Diameter	Length	Quantity per Box	Full Pack	Broken Pack
1⅜"	120"-180"	2 pieces per box	$67.26	$93.42

Product Number & Finish					
1831467	Antique Silver	**1043908**	Elegant Brass	**1831979**	Polished Nickel
1831631	Black	**1831469**	Gilded Bronze	**1831468**	Satin Nickel
1831470	Brushed Bronze	**1043952**	Gunmetal		

Finial plugs included.
6 standard brackets included.

1⅜" Rings

Ring

Clips sold separately.

Fits	Dimensions	Quantity per Box	Full Pack	Broken Pack
1⅜" Designer Metals™ Poles	Internal: 1¾" External: 2⅛" External to eyelet: 2⅜"	4 boxes per carton - 7 rings in each box	$17.95	$24.94

Product Number & Finish					
1043994	Antique Silver	**1043997**	Elegant Brass	**1044001**	Polished Nickel
1044000	Black	**1043996**	Gilded Bronze	**1043995**	Satin Nickel
1043999	Brushed Bronze	**1043998**	Gunmetal		

Bypass C-Ring

Clips sold separately.

Fits	Dimensions	Quantity per Box	Full Pack	Broken Pack
1⅜" Designer Metals™ Poles	Internal: 1¾" External: 2⅛" External to eyelet: 2⅜"	4 boxes per carton - 7 rings in each box	$14.89	$20.69

Product Number & Finish					
1044002	Antique Silver	**1044005**	Elegant Brass	**1044009**	Polished Nickel
1044008	Black	**1044004**	Gilded Bronze	**1044003**	Satin Nickel
1044007	Brushed Bronze	**1044006**	Gunmetal		

Transitional Ring

Clips sold separately.

Fits	Dimensions	Quantity per Box	Full Pack	Broken Pack
1⅜" Designer Metals™ Poles	Internal: 1⅝" External: 2" External to eyelet: 2½"	4 boxes per carton - 7 rings in each box	$24.57	$34.13

Product Number & Finish					
1831549	Antique Silver	**1043913**	Elegant Brass	**1831543PN**	Polished Nickel
1831542	Black	**1831547**	Gilded Bronze	**1831548**	Satin Nickel
1831546	Brushed Bronze	**1043957**	Gunmetal		

Clips

Fits	Quantity per Box	Full Pack	Broken Pack
Designer Metals™ Rings	7 bags per carton - 7 clips in each bag	$5.16	$7.16

Product Number & Finish					
1044010	Antique Silver	**1044013**	Elegant Brass	**1044017**	Polished Nickel
1044016	Black	**1044012**	Gilded Bronze	**1044011**	Satin Nickel
1044015	Brushed Bronze	**1044014**	Gunmetal		

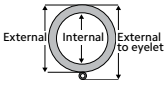

Use the measurement guide to the left to help determine the correct dimensions for your selected product.

1⅜" Rings

Lock Ring

Fits	Dimensions	Quantity per Box	Full Pack	Broken Pack
1⅜" Designer Metals™ Poles with French Returns	Internal: 1 7/16" External: 2⅛" External to eyelet: 2⅝"	8 bags per carton - 1 ring in each bag	$11.83	$16.45

Product Number & Finish					
1042605	Antique Silver	**1042761**	Elegant Brass	**1042609**	Polished Nickel
1042606	Black	**1042608**	Gilded Bronze	**1042760**	Satin Nickel
1042607	Brushed Bronze	**1042762**	Gunmetal		

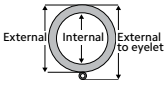

Use the measurement guide to the left to help determine the correct dimensions for your selected product.

1⅜" Brackets

3" Return O Bracket

Weight limit per bracket for 3" returns is 32 lbs.

Fits	Dimensions	Quantity per Box	Full Pack	Broken Pack
1⅜" Designer Metals™ Poles	Depth: 3 7/10" Height: 3" Width: ⅗" Wall to Pole: 1¾" Return: 3"	10 pieces per box	$22.92	$31.83

Product Number & Finish					
1042706	Antique Silver	**1042892**	Elegant Brass	**1042890**	Polished Nickel
1042707	Black	**1042709**	Gilded Bronze	**1042891**	Satin Nickel
1042708	Brushed Bronze	**1042893**	Gunmetal		

6" Return O Bracket

Weight limit per bracket for 6" returns is 16 lbs.

Fits	Dimensions	Quantity per Box	Full Pack	Broken Pack
1⅜" Designer Metals™ Poles	Depth: 6 7/10" Height: 3" Width: ⅗" Wall to Pole: 4¾" Return: 6"	10 pieces per box	$26.74	$37.13

Product Number & Finish					
1042894	Antique Silver	**1042900**	Elegant Brass	**1042898**	Polished Nickel
1042895	Black	**1042897**	Gilded Bronze	**1042899**	Satin Nickel
1042896	Brushed Bronze	**1042901**	Gunmetal		

3" Return Bypass O Bracket

Weight limit per bracket for 3" returns is 32 lbs.

Fits	Dimensions	Quantity per Box	Full Pack	Broken Pack
1⅜" Designer Metals™ Poles	Depth: 3 7/10" Height: 3" Width: ⅗" Wall to Pole: 1¾" Return: 3"	10 pieces per box	$22.92	$31.83

Product Number & Finish					
1042902	Antique Silver	**1042908**	Elegant Brass	**1042906**	Polished Nickel
1042903	Black	**1042905**	Gilded Bronze	**1042907**	Satin Nickel
1042904	Brushed Bronze	**1042909**	Gunmetal		

6" Return Bypass O Bracket

Weight limit per bracket for 6" returns is 16 lbs.

Fits	Dimensions	Quantity per Box	Full Pack	Broken Pack
1⅜" Designer Metals™ Poles	Depth: 6 7/10" Height: 3" Width: ⅗" Wall to Pole: 4¾" Return: 6"	10 pieces per box	$26.74	$37.13

Product Number & Finish					
1042910	Antique Silver	**1042916**	Elegant Brass	**1042914**	Polished Nickel
1042911	Black	**1042913**	Gilded Bronze	**1042915**	Satin Nickel
1042912	Brushed Bronze	**1042917**	Gunmetal		

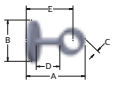

Use the measurement guide to the left to help determine the correct dimensions for your selected product.

1⅜" " French Returns

3" French Return - Left

Weight Limit for 3" French Returns is 32 lbs - wall mounted only

Fits	Dimensions	Quantity per Box	Full Pack	Broken Pack
1⅜" Designer Metals™ Poles	Arm Width: 3¼" Overall Width: 4¾" Back Plate Width: 3" Return: 3"	4 pieces per box	$55.72	$77.38

Product Number & Finish					
1042592	Antique Silver	**1042598**	Elegant Brass	**1042596**	Polished Nickel
1042593	Black	**1042595**	Gilded Bronze	**1042597**	Satin Nickel
1042594	Brushed Bronze	**1042599**	Gunmetal		

3" French Return - Right

Weight Limit for 3" French Returns is 32 lbs - wall mounted only

Fits	Dimensions	Quantity per Box	Full Pack	Broken Pack
1⅜" Designer Metals™ Poles	Arm Width: 3¼" Overall Width: 4¾" Back Plate Width: 3" Return: 3"	4 pieces per box	$55.72	$77.38

Product Number & Finish					
1042830	Antique Silver	**1042836**	Elegant Brass	**1042834**	Polished Nickel
1042831	Black	**1042833**	Gilded Bronze	**1042835**	Satin Nickel
1042832	Brushed Bronze	**1042837**	Gunmetal		

6" French Return - Left

Weight Limit for 6" French Returns is 16 lbs - wall mounted only

Fits	Dimensions	Quantity per Box	Full Pack	Broken Pack
1⅜" Designer Metals™ Poles	Arm Width: 3¼" Overall Width: 4¾" Back Plate Width: 3" Return: 6"	4 pieces per box	$55.72	$77.38

Product Number & Finish					
1042838	Antique Silver	**1042844**	Elegant Brass	**1042842**	Polished Nickel
1042839	Black	**1042841**	Gilded Bronze	**1042843**	Satin Nickel
1042840	Brushed Bronze	**1042845**	Gunmetal		

6" French Return - Right

Weight Limit for 6" French Returns is 16 lbs - wall mounted only

Fits	Dimensions	Quantity per Box	Full Pack	Broken Pack
1⅜" Designer Metals™ Poles	Arm Width: 3¼" Overall Width: 4¾" Back Plate Width: 3" Return: 6"	4 pieces per box	$55.72	$77.38

Product Number & Finish					
1042846	Antique Silver	**1042852**	Elegant Brass	**1042850**	Polished Nickel
1042847	Black	**1042849**	Gilded Bronze	**1042851**	Satin Nickel
1042848	Brushed Bronze	**1042853**	Gunmetal		

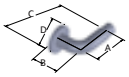

Use the measurement guide to the left to help determine the correct dimensions for your selected product.

1⅜" Decorative Brackets

Decorative Bracket

Fits	Dimensions	Quantity per Box	Full Pack	Broken Pack
1⅜" Designer Metals™ Poles	Depth: 4⅛"-5⅛" Height: 3" Width: ⅞" Wall to Pole: 2⅛"-3⅛" Return: 3"-4"	10 pieces per box	$17.57	$24.40

Product Number & Finish					
1832074	Antique Silver	**1043895**	Elegant Brass	**1832080**	Polished Nickel
1832075	Black	**1832078**	Gilded Bronze	**1832081**	Satin Nickel
1832076	Brushed Bronze	**1043939**	Gunmetal		

Decorative Bypass Bracket

Fits	Dimensions	Quantity per Box	Full Pack	Broken Pack
1⅜" Designer Metals™ Poles	Depth: 3¾"-4¾" Height: 3" Width: ⅞" Wall to Pole: 2⅛"-3⅛" Return: 3"-4"	10 pieces per box	$17.57	$24.40

Product Number & Finish					
1832090	Antique Silver	**1043887**	Elegant Brass	**1832096**	Polished Nickel
1832091	Black	**1832094**	Gilded Bronze	**1832097**	Satin Nickel
1832092	Brushed Bronze	**1043931**	Gunmetal		

Decorative Ceiling Bracket

Fits	Dimensions	Quantity per Box	Full Pack	Broken Pack
1⅜" Designer Metals™ Poles	Depth: 3" Height: 3¾"-4¾" Width: ⅞" Ceiling to Pole: 2⅝"-3⅝" Back Edge to Pole: 2⅞"	10 pieces per box	$17.57	$24.40

Product Number & Finish					
1832082	Antique Silver	**1043889**	Elegant Brass	**1832088**	Polished Nickel
1832083	Black	**1832086**	Gilded Bronze	**1832089**	Satin Nickel
1832084	Brushed Bronze	**1043933**	Gunmetal		

Decorative Ceiling Bypass Bracket

Fits	Dimensions	Quantity per Box	Full Pack	Broken Pack
1⅜" Designer Metals™ Poles	Depth: 3" Height: 3⅝"-4⅝" Width: ⅞" Ceiling to Pole: 2⅝"-3⅝" Back Edge to Pole: 3"	10 pieces per box	$17.57	$24.40

Product Number & Finish					
1832098	Antique Silver	**1043890**	Elegant Brass	**1832104**	Polished Nickel
1832099	Black	**1832102**	Gilded Bronze	**1832105**	Satin Nickel
1832100	Brushed Bronze	**1043934**	Gunmetal		

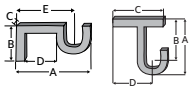

Use the measurement guide to the left to help determine the correct dimensions for your selected product.

1⅜" Decorative Brackets

Decorative Double Bracket

Fits	Dimensions	Quantity per Box	Full Pack	Broken Pack
1⅜" Designer Metals™ Poles	Depth: 7⅛"-8⅛" Height: 3" Width: ⅞" Wall to Back Pole: 2⅛"-3⅛" Inner Return: 3"-4" Outer Return: 6"-7"	10 pieces per box	$23.13	$32.14

Product Number & Finish					
1832106	Antique Silver	**1043893**	Elegant Brass	**1832112**	Polished Nickel
1832107	Black	**1832110**	Gilded Bronze	**1832113**	Satin Nickel
1832108	Brushed Bronze	**1043937**	Gunmetal		

Decorative Double Bypass Bracket

Fits	Dimensions	Quantity per Box	Full Pack	Broken Pack
1⅜" Designer Metals™ Poles	Depth: 7"-8" Height: 3" Width: ⅞" Wall to Back Pole: 2¼"-3¼" Inner Return: 3¼"-4¼" Outer Return: 6¼"-7¼"	10 pieces per box	$23.13	$32.14

Product Number & Finish					
1832122	Antique Silver	**1043894**	Elegant Brass	**1832128**	Polished Nickel
1832123	Black	**1832126**	Gilded Bronze	**1832129**	Satin Nickel
1832124	Brushed Bronze	**1043938**	Gunmetal		

Decorative Ceiling Double Bracket

Fits	Dimensions	Quantity per Box	Full Pack	Broken Pack
1⅜" Designer Metals™ Poles	Depth: 5⅛ Height: 3⅝"-4⅝ Width: ⅞" Ceiling to Pole: 2⅝-3⅝" Back Edge to Pole: 3½"	10 pieces per box	$23.13	$32.14

Product Number & Finish					
1832114	Antique Silver	**1043891**	Elegant Brass	**1832120**	Polished Nickel
1832115	Black	**1832118**	Gilded Bronze	**1832121**	Satin Nickel
1832116	Brushed Bronze	**1043935**	Gunmetal		

Decorative Bracket Extension

Fits	Dimensions	Quantity per Box	Full Pack	Broken Pack
1⅜" Designer Metals™ Poles	Depth: 3"-4" Height: ½" Width: ½"	10 pieces per box	$6.33	$8.80

Product Number & Finish					
1832138	Antique Silver	**1043886**	Elegant Brass	**1832144**	Polished Nickel
1832139	Black	**1832142**	Gilded Bronze	**1832145**	Satin Nickel
1832140	Brushed Bronze	**1043930**	Gunmetal		

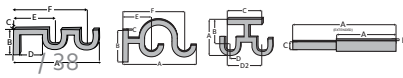

Use the measurement guide to the left to help determine the correct dimensions for your selected product.

1⅜" Standard Brackets

Standard Bracket

Fits	Dimensions	Quantity per Box	Full Pack	Broken Pack
1⅜" Designer Metals™ Poles	Depth: 5¼-7" Height: 2⅝" Width: 1" Wall to Pole: 3½"-5¼" Return: 4⅜"-6⅛"	10 pieces per box	$5.10	$7.09

Product Number & Finish					
1858569	Antique Silver	**1043885**	Elegant Brass	*	Polished Nickel
1858572	Black	**1858568**	Gilded Bronze	**1858570**	Satin Nickel
1858574	Brushed Bronze	**1043929**	Gunmetal		

*Order Satin Nickel for Polished Nickel

Use the measurement guide to the left to help determine the correct dimensions for your selected product.

1⅜" Accessories & Components

Inside Mount Socket

Fits	Dimensions	Quantity per Box	Full Pack	Broken Pack
1⅜" Designer Metals™ Poles	Depth: 1¼" Height: 1⅝" Width: 1⅝"	4 pairs per box	$17.38	$24.13

Product Number & Finish					
1832218	Antique Silver	**1043907**	Elegant Brass	**1832224**	Polished Nickel
1832219	Black	**1832222**	Gilded Bronze	**1832225**	Satin Nickel
1832220	Brushed Bronze	**1043951**	Gunmetal		

Mounts a 1⅜" rod between two facing walls.

Swivel Socket

Fits	Dimensions	Quantity per Box	Full Pack	Broken Pack
1⅜" Designer Metals™ Poles 1⅜" Estate™ Traverse Rods	Length to Center: 1 1/32" Pole Diameter: 1 7/16" Full Length: 1⅞" Depth of Socket: ⅛"	4 pieces per box	$19.28	$26.78

Product Number & Finish					
1831428	Antique Silver	**1043912**	Elegant Brass	**1831422PN**	Polished Nickel
1831421	Black	**1831426**	Gilded Bronze	**1831427**	Satin Nickel
1831425	Brushed Bronze	**1043956**	Gunmetal		

36" Baton with Bypass C-Ring

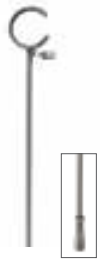

End of Baton

Fits	Dimensions	Quantity per Box	Full Pack	Broken Pack
1⅜" Designer Metals™ Poles	36" Long	6 pieces per box	$19.28	$26.78

Product Number & Finish					
1831558	Antique Silver	**1043921**	Elegant Brass	**1831559**	Polished Nickel
1831551	Black	**1831556**	Gilded Bronze	**1831557**	Satin Nickel
1831555	Brushed Bronze	**1043965**	Gunmetal		

Finial Plug

Fits	Quantity per Box	Full Pack	Broken Pack
1⅜" Designer Metals™ Poles	20 pieces per box	$2.41	$3.34

Product Number & Finish	
73405058	White

Can be used with stationary fixed width & telescoping rods.

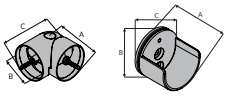

Use the measurement guide to the left to help determine the correct dimensions for your selected product.

1⅜" Components

Internal Rod Splice

Fits	Quantity per Box	Full Pack	Broken Pack
1⅜" Designer Metals™ Poles	6 pieces per box	$2.41	$3.34

Product Number & Finish	
73304061	Bright Zinc

Connects two poles together for larger width options.

Finial Wall Mount

Fits	Quantity per Box	Full Pack	Broken Pack
1⅜" Designer Metals™ Finials	4 pairs per box	$4.51	$6.26

Product Number & Finish	
54780058	White

Use with decorative finial.

Teflon Tape

Quantity per Roll	Quantity per Box	Full Pack	Broken Pack
54' per roll	1 roll per box	$65.18	n/a

Product Number & Finish	
84990000	Clear

Teflon tape is used on stationary poles to help rings slide smoothly across the pole.

Telescoping Rod | Europa in Antique Silver
Rings
Standard Bracket

2" Finials & Endcaps

Corsa

Fits	Dimensions	Quantity per Box	Full Pack	Broken Pack
2" Estate™ Traverse Rods	Depth: 2¼" Height: 3½" Width: 3½"	4 pairs per box	$35.71	$49.59

Product Number & Finish					
1832001	Antique Silver	**1043915**	Elegant Brass	**1831952**	Polished Nickel
1832008	Black	**1832003**	Gilded Bronze	**1832002**	Satin Nickel
1832004	Brushed Bronze	**1043959**	Gunmetal		

Europa

Fits	Dimensions	Quantity per Box	Full Pack	Broken Pack
2" Estate™ Traverse Rods	Depth: 4¼" Height: 3⅜" Width: 3⅜"	4 pairs per box	$68.58	$95.24

Product Number & Finish					
1832202	Antique Silver	**1043916**	Elegant Brass	**1832208**	Polished Nickel
1832203	Black	**1832206**	Gilded Bronze	**1832209**	Satin Nickel
1832204	Brushed Bronze	**1043960**	Gunmetal		

Pandora

Fits	Dimensions	Quantity per Box	Full Pack	Broken Pack
2" Estate™ Traverse Rods	Depth: 5⅜" Height: 3¾" Width: 3¾"	4 pairs per box	$45.72	$63.51

Product Number & Finish					
1831981	Antique Silver	**1043917**	Elegant Brass	**1831980**	Polished Nickel
1831988	Black	**1831983**	Gilded Bronze	**1831982**	Satin Nickel
1831984	Brushed Bronze	**1043961**	Gunmetal		

Rao

Fits	Dimensions	Quantity per Box	Full Pack	Broken Pack
2" Estate™ Traverse Rods	Depth: 1⅛" Height: 2½" Width: 2½"	4 pairs per box	$28.52	$39.60

Product Number & Finish					
1831992	Antique Silver	**1043918**	Elegant Brass	**1930946**	Polished Nickel
1831999	Black	**1831994**	Gilded Bronze	**1831993**	Satin Nickel
1831995	Brushed Bronze	**1043962**	Gunmetal		

2" Finials & Endcaps

Stratta

Fits	Dimensions	Quantity per Box	Full Pack	Broken Pack
2" Estate™ Traverse Rods	Depth: 3⅛" Height: 3⅝" Width: 3⅝"	4 pairs per box	$45.72	$63.51

Product Number & Finish					
1832210	Antique Silver	**1043919**	Elegant Brass	**1832216**	Polished Nickel
1832211A	Black	**1832214**	Gilded Bronze	**1832217**	Satin Nickel
1832212	Brushed Bronze	**1043963**	Gunmetal		

Designer Metals™ | 2" Estate™ Traverse Rod

To learn more about the technical specs on Estate™ Traverse Rods and AMP™ Motorization, see pages 50-62.

2" Assembled Set with Slides

Assembled Set with Slides - Manual Traversing Rod

Unit of Measure	Dealer Cost
Foot	$56.00

Orders over 8 feet will be spliced. A Keystone will be provided to cover the splice.

AMP™ Motorization Upcharge	add $621.00

Charger, item #62201300 included. Remotes sold separately.

Product Number & Finish					
93685867	Antique Silver	**93685925**	Elegant Brass	**93685924**	Polished Nickel
93685922	Black	**93685920**	Gilded Bronze	**93685923**	Satin Nickel
93685919	Brushed Bronze	**93685926**	Gunmetal		

Assembled Set with Wheeled Ripplefold™ Carriers - Manual Traversing Rod

Unit of Measure	Dealer Cost
Foot	$56.00

Orders over 8 feet will be spliced. A Keystone will be provided to cover the splice.

AMP™ Motorization Upcharge	add $621.00

Charger, item #62201300 included. Remotes sold separately.

Product Number & Finish					
93686867	Antique Silver	**93686925**	Elegant Brass	**93686924**	Polished Nickel
93686922	Black	**93686920**	Gilded Bronze	**93686923**	Satin Nickel
93686919	Brushed Bronze	**93686926**	Gunmetal		

2" Estate™ Keystone

Fits	Quantity per Box	Full Pack	Broken Pack
2" Designer Metals Estate™ Traverse Rods	25 pieces per box	$9.83	$13.65

Product Number & Finish					
1832234	Antique Silver	**1043927**	Elegant Brass	**1832240**	Polished Nickel
1832235	Black	**1832238**	Gilded Bronze	**1832241**	Satin Nickel
1832236	Brushed Bronze	**1043970**	Gunmetal		

* Assembled sets do not include finials. Additional slides can be ordered at a charge. Otherwise, a standard set includes 4 slides per foot.

2" Estate™ Rod With Slides | Black

Custom sizes only.

Available in 1⅜" & 2".

1⅜" Estate™ Rod With Slides | Antique Silver

Custom sizes only.

Available in 1⅜" & 2".

2" Estate™ Rod With Ripplefold™ | Gilded Bronze

Custom sizes only.

Available in 1⅜" & 2".

Estate™ Keystones | Gilded Bronze

Available in 1⅜" & 2".

2" Estate™ Traverse Rod Components

To learn more about the technical specs on Estate™ Traverse Rods and AMP™ Motorization, see pages 50-62.

Item	Product No. & Finish		Description	Quantity Per Box	Full Pack Price	Broken Pack Price
	62101000 **62101010**	White Black	AMP Remote Control RF 2W 15 Channel	1 piece per box	$47.85	n/a
	62201300	White	AMP Battery Charger 16.5V/0.89A	1 piece per box	$20.20	n/a
	62102000	White	AMP Gateway USB Bridge	1 piece per box	$141.33	n/a
	62109000	White	AMP Wall Switch Surface RF 2W 15 Channel	1 piece per box	$61.75	n/a
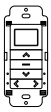	**62108000**	White	AMP Wall Switch RF 2W 15 Channel	1 piece per box	$38.59	n/a
	1026660		15" Cable Assembly	10 pieces per box	$6.57	n/a
	1026661		4' Cable Assembly	10 pieces per box	$7.40	n/a
	1026662		10' Cable Assembly	10 pieces per box	$11.01	n/a
	1026663		20' Cable Assembly	10 pieces per box	$15.93	n/a

2" Rings & Accessories

Swivel Socket

Fits	Dimensions	Quantity per Box	Full Pack	Broken Pack
2" Estate™ Traverse Rods	Length to Center: 1⅝" Pole Diameter: 2 1/16" Full Length: 2 1/16" Depth of Socket: ¼"	4 pieces per box	$23.13	$32.14

Product Number & Finish					
1831419	Antique Silver	**1043920**	Elegant Brass	**1831413PN**	Polished Nickel
1831412	Black	**1831417**	Gilded Bronze	**1831418**	Satin Nickel
1831416	Brushed Bronze	**1043964**	Gunmetal		

Double Bracket

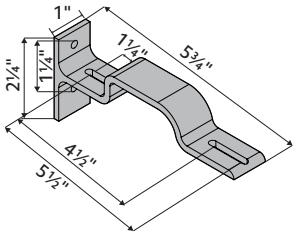

Fits	Dimensions	Quantity per Box	Full Pack	Broken Pack
1⅜" Estate™ Traverse Rods 2" Estate™ Traverse Rods	Depth: 5¾" Height: 2¼" Width: 1"	10 pieces per box	$21.25	$29.50

Product Number & Finish	
71134110	Satin Brass

Double Bracket

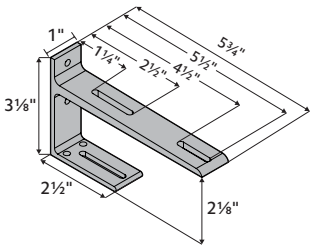

Fits	Dimensions	Quantity per Box	Full Pack	Broken Pack
1⅜" Estate™ Traverse Rods 2" Estate™ Traverse Rods	Depth: 5¾" Height: 3⅛" Width: 1"	10 pieces per box	$22.17	$30.79

Product Number & Finish			
71132062	Antique Brass	**71132110**	Satin Brass
71132006	Black	**71132012**	Satin Nickel

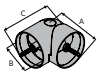

Use the measurement guide to the left to help determine the correct dimensions for your selected product.

Decorative Traverse Rod Overview

To help determine which system is right for your project, use the guideline below to select the best fit. For more detailed information about each track, please visit our resource library at kirsch.com.

	Designer Metals™	Wood Trends™	Wrought Iron
What is your preferred size?			
1" Hollis™ Traverse Rods	•		
1⅜" Estate™ Traverse Rods	•	•	•
2" Estate™ Traverse Rods	•	•	
What is your preferred Draw type?			
Motorized	•	•	•
Manual	•	•	•
What is your preferred Drapery Heading type?			
Pleated	•	•	•
Ripplefold™	•	•	•
What is your mounting location?			
Ceiling Mount*	•	•	•
Wall Mount	•	•	•

*Finial choices may be limited for ceiling mounted Estate™ Traverse Rods. Only the Fitz finial can be used on ceiling mounted Hollis™ Traverse Rods.

Track Performance Data

Style	Heading Style	Mount	Draw	Minimum Track Length	Maximum Track Length	Maximum Fabric Weight	Lbs. per Ft.
1" Hollis™ Traverse Rod Manual or Motorized Draw	Pleated, Ripplefold™	Ceiling, Wall	Manual One & Two-Way	18 in	40 ft	64 lbs	4
			Motorized One -Way	18 in	8 ft	32 lbs	4
			Motorized Two-Way	18 in	16 ft	64 lbs	4
83611 1⅜" Estate™ Traverse Rod Manual or Motorized Draw	Pleated, Ripplefold™	Ceiling, Wall	One-Way	18 in	16 ft	64 lbs	4
			Two-Way	18 in	16 ft	64 lbs	4
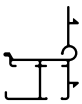 93601 2" Estate™ Traverse Rod Manual or Motorized Draw	Pleated, Ripplefold™	Ceiling, Wall	One-Way	18 in	16 ft	64 lbs	4
			Two-Way	18 in	16 ft	64 lbs	4

*Maximum track lengths and maximum fabric weight do not apply to curved track. Check with customer service for feasibility. Send complete specifications and fabric weight.

Splices & Keystones per Track

Track Length	Number of Splices	Keystones Included for Estate™ Traverse Rods Only
8 ft. to 16 ft.	1	1

Traverse Rod Operating Systems

Motorized Draw

AMP™ Motorization

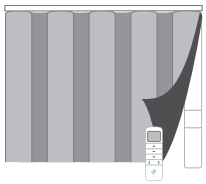

- Easy to use
- Quiet, powerful motor
- Pleated or Ripplefold™
- For Hollis™ Traverse Rods, Estate™ Traverse Rods or Architrac® Series 94001
- For more information, see page 50

Manual Draw

Cord Draw

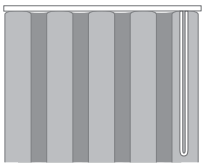

- Easy to use
- Pleated or Ripplefold™
- For Estate™ Traverse Rods only

Hand/Baton Draw

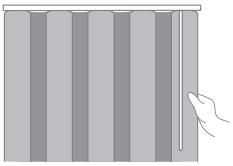

- Easy to use
- A gentle tug allows drapery to glide across track
- Pleated or Ripplefold™

Baton Duplex Draw

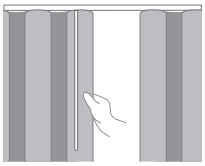

- Easy to use
- Used on split draw rods
- Pleated or Ripplefold™
- When the baton is pulled on one stack, draperies on both sides of the traverse rod open or close
- For Estate™ Traverse Rods only

Header Styles

Ripplefold™

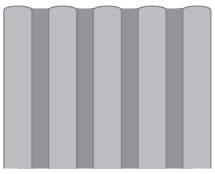

- Panels can be pressed flat, yet fall into fold
- No hooks or pins
- Headings are suspended under track
- Stack back is less than conventional pleated draperies
- Draperies snap on/off carriers for easy installation
- Interior drapery appearance is identical to exterior-facing appearance

Pleated

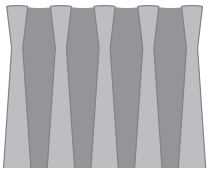

- A classic header option
- Can be used with most track systems using slip-in or pin-on hooks
- Headings can be suspended under the track or over the face of the track to conceal hardware
- Four carriers per foot is standard, additional carriers or rings can be ordered

Hollis™ & Estate™ Traverse Rods: Two Styles. Infinite Ways of Customization.

Not every window treatment is a simple, straight forward project. Sometimes you need more and that's where our traverse rods shine. They are the perfect solution when you need something a little extra, like a pleated or Ripplefold™ custom drapery, a custom pole length, or the oh-so-convenient option of motorization.

There are many ways to customize each traverse rod, we are certain you'll find the perfect solution for your window treatments. It's nice having options, isn't it?

Which traverse rod is right for you?

HOLLIS™ TRAVERSE ROD

Hollis™ Traverse Rod is the perfect solution for creating a uniform look between traverse rods and stationary rods in the same space or throughout the home. Great for tight spaces with it's 1" compact size and coordinating finials. You can even go without a finial and still have a completed look in one of our stunning Designer Metals™ finishes.

ESTATE™ TRAVERSE ROD

Estate™ Traverse Rod is a stately solution better suited for larger projects with a 1⅜" or 2" option. You also have a choice of metal, wood and even wrought iron for a material choice. Not to mention, many finishes and finials to choose from to complete your look.

Diameters

1"

1⅜" 2"

Drapery Heading Styles

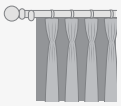

Pleated

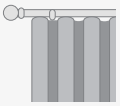

Ripplefold™

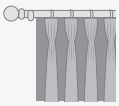

Pleated

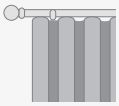

Ripplefold™

Carrier Styles

Ring Carrier

Pleated

Ripplefold™

Pleated

Ripplefold™

Bracket Styles

Hidden

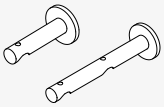

Single or Double Over the Top

Ceiling

Wall

Double Wall

Ceiling

Operating Systems

Stationary

Hand

Baton

Motorized

Hand

Cord

Baton

Duplex

Motorized

AMP™ Motorization

Why AMP™?

The slim design of the quiet, yet powerful motor and the position on the track allows the motor to tuck seamlessly behind your drapery panel so you'll never have to sacrifice your style or comfort. For safety measures, you're able to move the draperies with a gentle tug, allowing for operation when a remote is not present or if a guest is unaware of the motorization feature. The dual battery and AC power sources allows operation in case of a power outage so draperies may be opened in the event of an emergency. AMP™ Motorization is available on our most popular traversing tracks, Hollis™ Traverse Rods Estate™ Traverse Rods and Architrac® Series 94001 and in drapery header styles Ripplefold™ and pleated for a variety of styling options. This is comfortable living at its finest.

For AMP™ Motorization brochure, programming instructions and installation instructions, please visit the drapery hardware resource library at kirsch.com.

Benefits & Features

AMP™ Motorization

- Motor mounts to the back of the track which allows a seamless look between motorized and manual traverse rods
- Drapery fabrication does not need to change between manually controlled draperies and motorized draperies; No additional returns or any special instructions
- Limits are set automatically after installation
- Remote control is radio frequency and easily pairs with the motor
- Tug feature; when drapery is pulled the motor will traverse the drapery
- AMP™ App with AMP™ USB Bridge
- Architrac® Series 94001 Rods with AMP™ cannot be bent or curved

Frequently Asked Questions

What is the weight capacity?

64 lbs	Motor is rated to 64 lbs. Be sure not to exceed the Estate or Architrac track specifications to ensure your motor operates optimally.

Can you double the weight capacity by using two motors?

No	Only use one motor per rod.

Does AMP™ offer limit setting?

Yes	The motor automatically sets its limits.

Does AMP™ offer touch control?

Yes	The tug feature allows you to pull on the drapery and the motor will automatically open or close your draperies.

How long is the power cord?

6 ft	The durable, non-extendable power cord is extra long for out of reach places. Any extra can be rolled and secured for a tidy look. Cable extensions are available in 15", 4', 10' and 20' lengths to reach outlets that are farther away from the motor.

Is there a wall switch?

Yes	There are Flush Mount and Surface Mount Wall Switches available.

Does AMP™ offer a warranty?

Yes	See the Kirsch Warranty document for more information.

Download the AMP™ APP to get started

Download on the App Store

GET IT ON Google Play

AMP™ Motorization Overview

Overview

- Soft start/stop & manual operation
- Tug feature: when drapery is pulled the motor will traverse the drapery
- Automatic limits on end stop
- Favorite/intermediate position
- Dry contact for external control
- RF Remote and wall switches
- Setting with buttons on motor units
- Setting with external dry contact switch
- LED Indicators
- One-Way and Two-Way Draw
- Pleated
- Ripplefold™
- AMP™ App with AMP™ USB Bridge

Available Colors

White

Side View	Front View	Bottom View

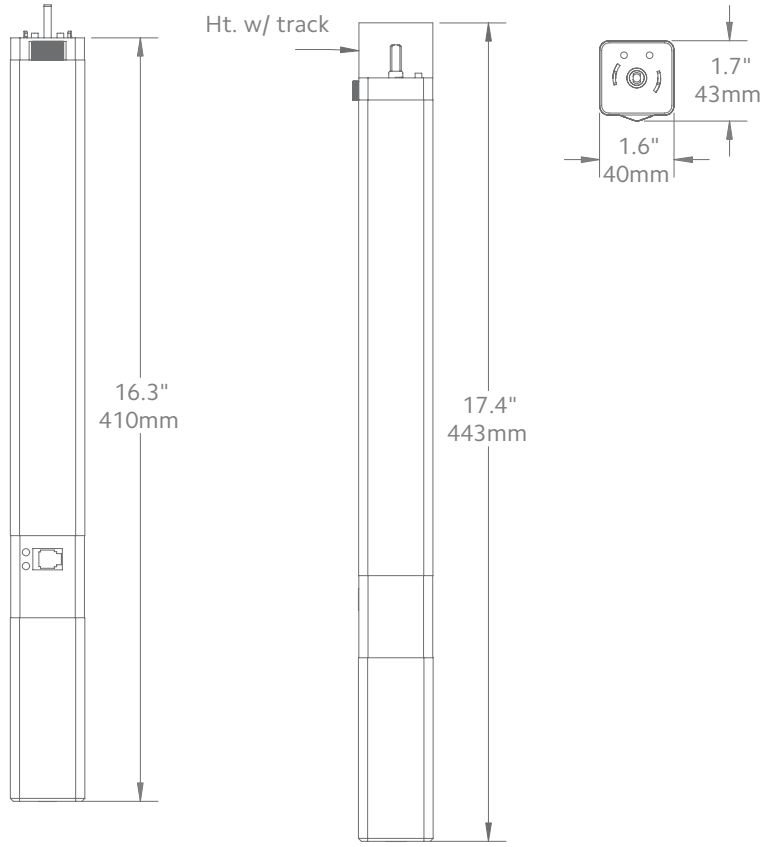

Motor Unit	Product No.
AMP™ Drapery Motor	62001300

Technical Specs	AMP™ Motor
Power Supply	DC 16.5V-0.89A (100-240VAC 50/60Hz 0.5A)
Amperage	2.55Ah
Average Linear Speed	7.8inches/sec
Power Consumption	40 watts
Torque	1.2Nm
Power Cable Length	6 feet
Variable Speed	80, 100 & 120 rpm
Certifications	UL/CE
Max. Track Length	Hollis™ - 16 ft Estate™ - 16 ft Architrac™ 94001 - 16 ft
Max. Load	64 lbs

Follow track specifications for drapery weight.

Estate™ Traverse Rods Bracket Spacing & Mount Options

Place brackets at each end. On the ends where the drapery will stack, place the next bracket at a maximum of 24" from the first bracket, then place remaining brackets at 48" intervals over the remainder of the track. Spacing may need to be shortened for heavier draperies. All mounting options are compatible with our AMP™ Motorization.

Wall Mount using parts:

To achieve this look, order Estate™ Traverse Rod, wall mount and all components will be included.

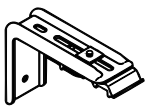

Selected color:

94129061 Zinc
1856973 Satin Nickel
1856978 Brushed Bronze
1857324 Black

1⅜" Estate™ Traverse Rod | Wall Mount

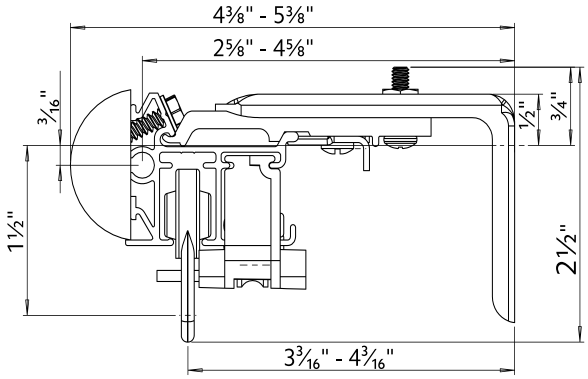

with AMP™ Motorization

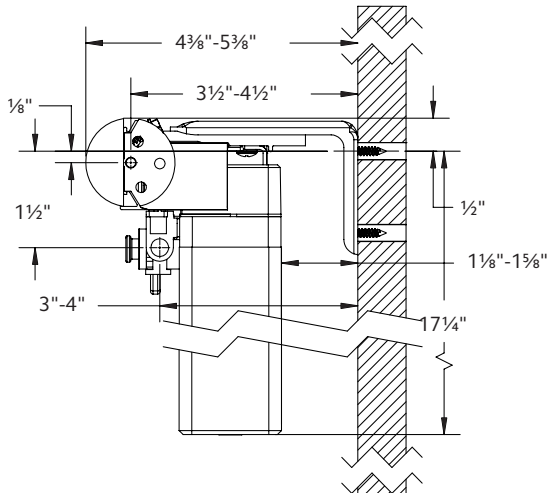

2" Estate™ Traverse Rod | Wall Mount

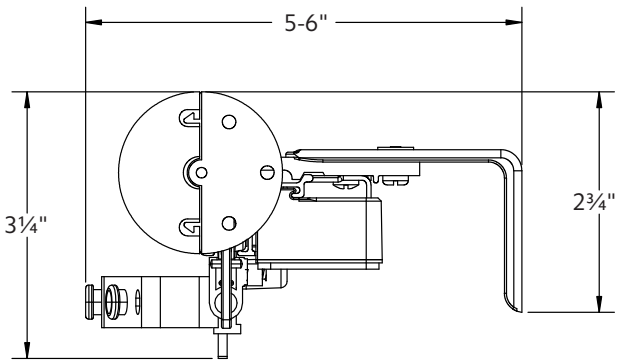

with AMP™ Motorization

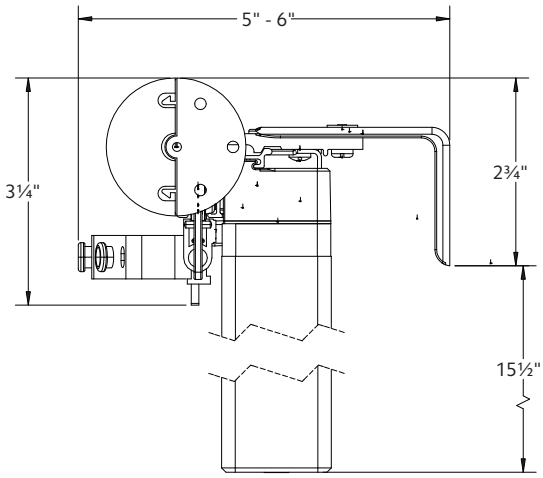

Ceiling Mount using parts:

To achieve this look, order Estate™ Traverse Rod, ceiling mounted. 94130xxx brackets are included with the rod. Then order item 1796061 ceiling mount bracket in the quantity needed based on the bracket spacing drawing on page 86.

94130xxx

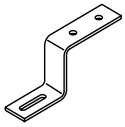

1796061

1⅜" Estate™ Traverse Rod | Ceiling Mount

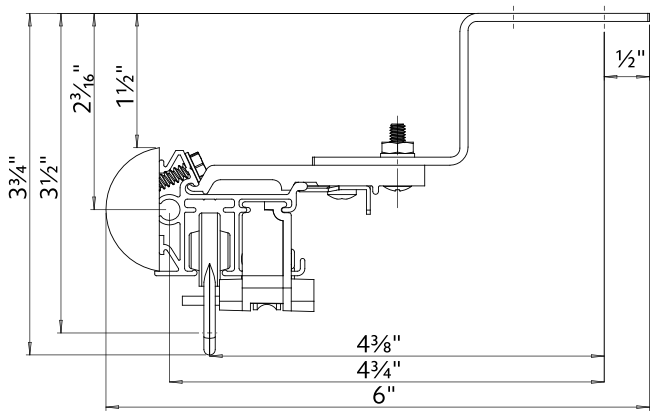

with AMP™ Motorization

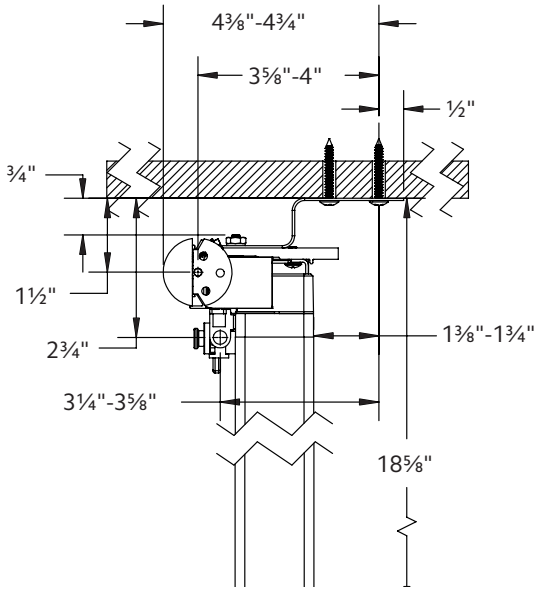

2" Estate™ Traverse Rod | Ceiling Mount

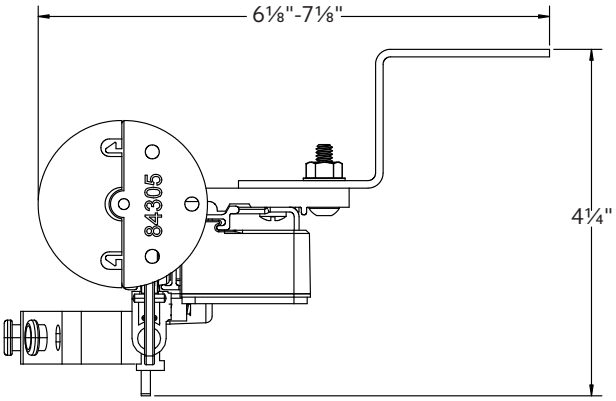

with AMP™ Motorization

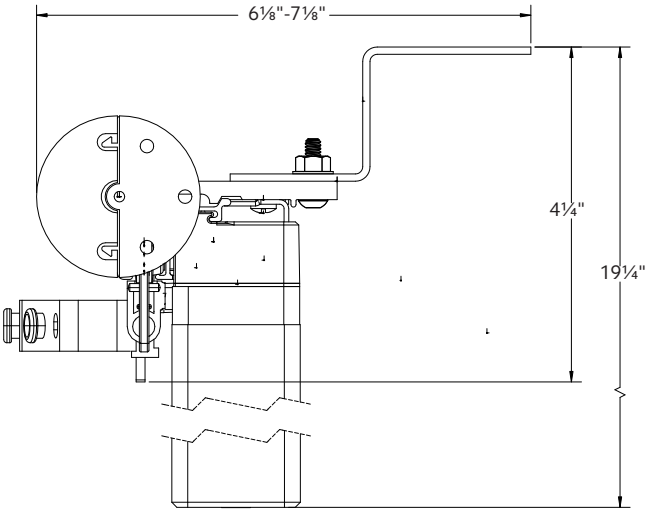

Double Wall Mount using parts:

To achieve this look, order Estate™ Traverse Rod, ceiling mounted. 94130xxx brackets are included with the rod. Then order one, item 94125xxx double bracket and two, item 1796061 ceiling mount brackets multiplied by the quantity needed based on the bracket spacing drawing on page 86.

94125xxx

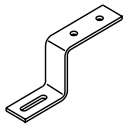

1796061

94130xxx

1⅜" Estate™ Traverse Rod | Double Wall Mount with AMP™ Motorization

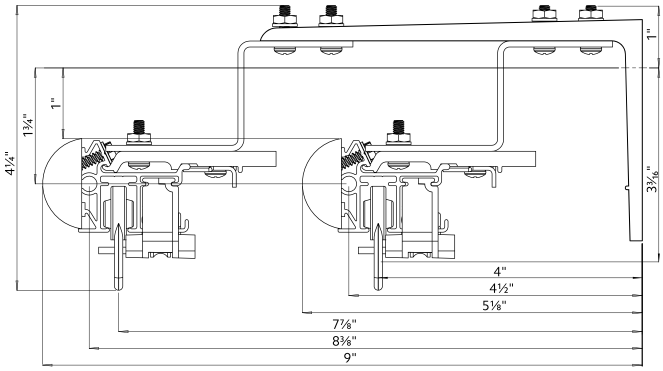

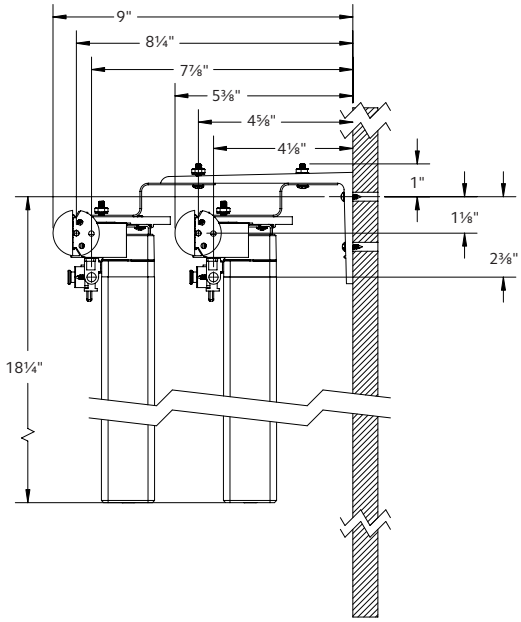

2" Estate™ Traverse Rod | Double Wall Mount with AMP™ Motorization

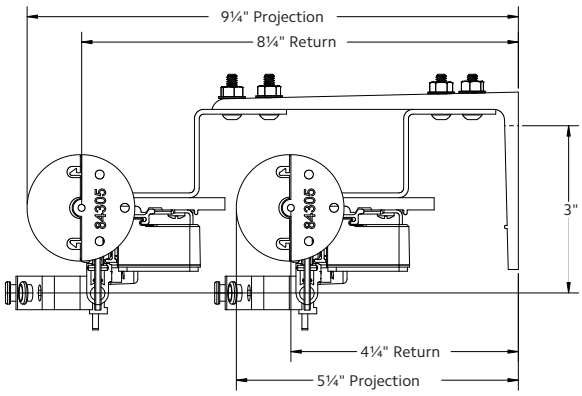

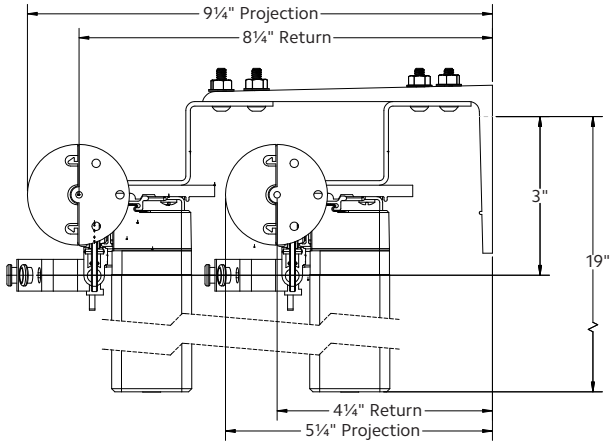

Double Wall Mount using parts:

To achieve this look, order Estate™ Traverse Rod ceiling mounted. 94130xxx brackets are included with the rod. Then order one, item 71134110 double bracket in the quantity needed based on the bracket spacing drawing on page 86.

94125xxx

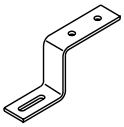

1796061

94130xxx

2" Estate™ Traverse Rod | Front & 1⅜" Back Double Wall Mount

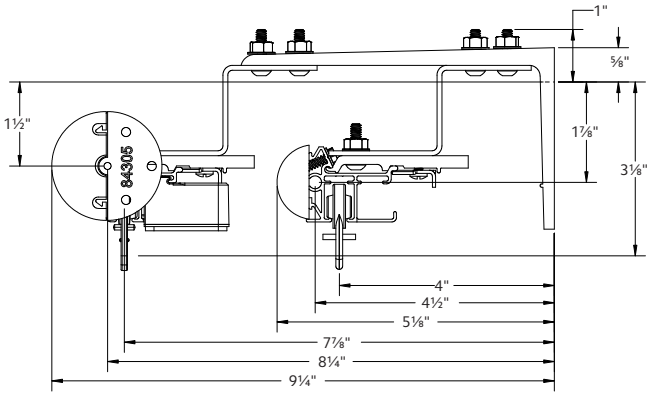

with AMP™ Motorization

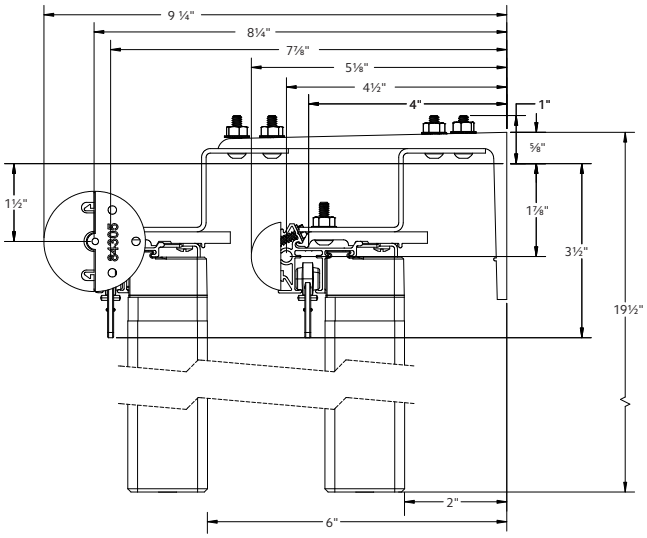

Double Wall Mount using parts:

To achieve this look, order Estate™ Traverse Rod ceiling mounted. 94130xxx brackets are included with the rod. Then order one, item 71134110 double bracket in the quantity needed based on the bracket spacing drawing on page 86.

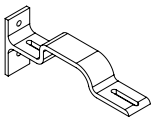

71134110

94130xxx

2" Front & 1⅜" Back | Double Wall Mount

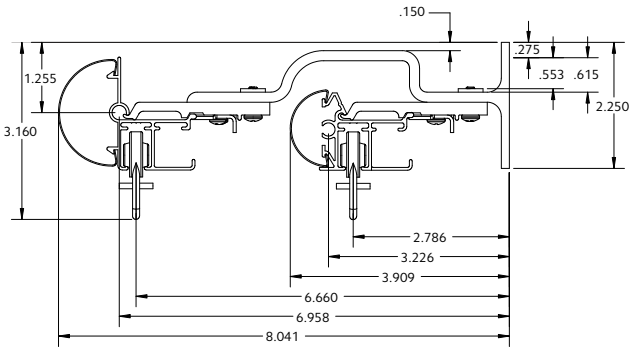

with AMP™ Motorization

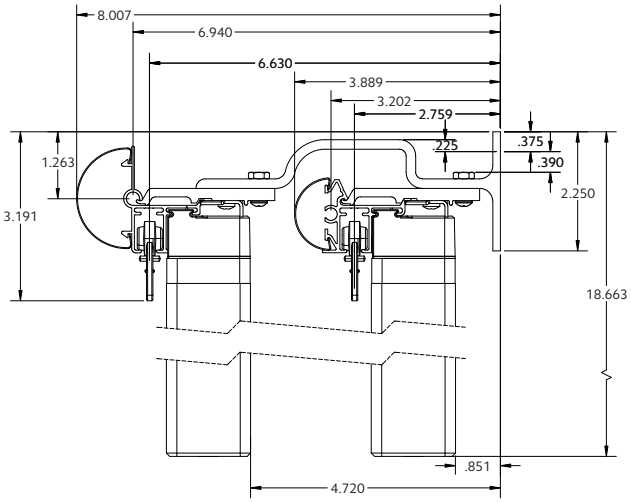

1⅜" Front & 1⅜" Back | Double Wall Mount

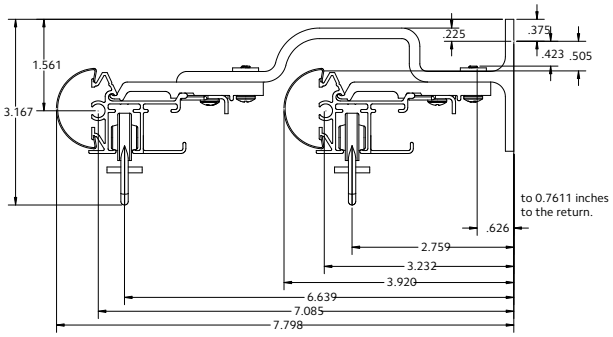

with AMP™ Motorization

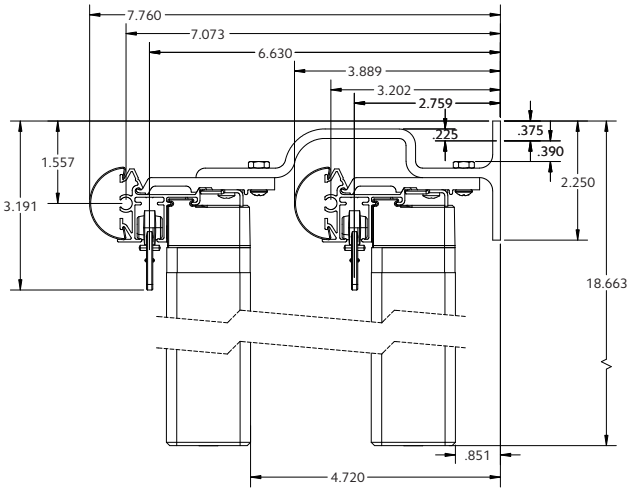

Hollis™ Traverse Rods Bracket Spacing & Mount Options

Place brackets at each end. On the ends where the drapery will stack, place the next bracket at a maximum of 24" from the first bracket, then place remaining brackets at 48" intervals over the remainder of the track. Spacing may need to be shortened for heavier draperies. All mounting options are compatible with our motorization.

Hidden Bracket | Wall Mount using parts:

To achieve this look, order Hollis™ Traverse Rod, wall mount hidden bracket and all components will be included.

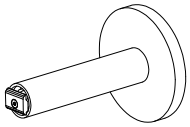

Wall Mount

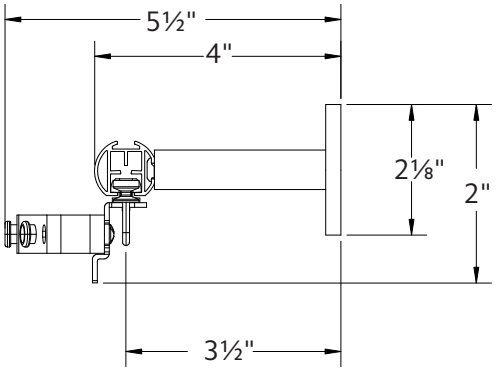

with AMP™ Motorization

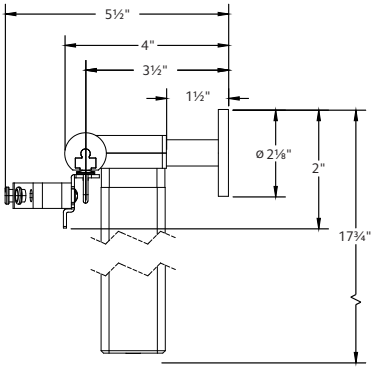

Ceiling Mount using parts:

To achieve this look, order Hollis™ Traverse Rod, ceiling mount and all components will be included.

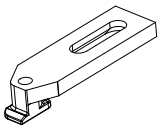

Ceiling Mount

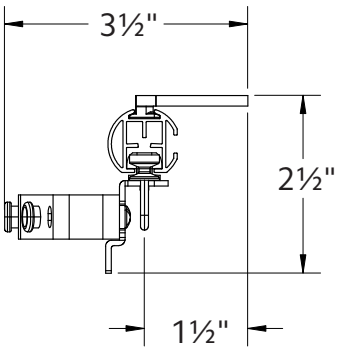

with AMP™ Motorization

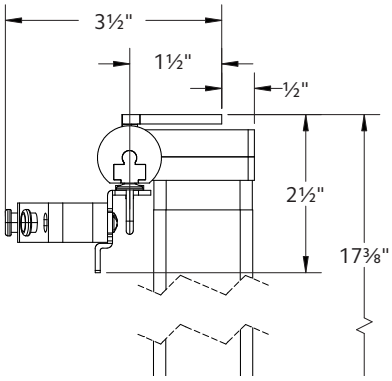

Single Over the Top Wall Mount using parts:

To achieve this look, order Hollis™ Traverse Rod, wall mount over the top bracket and all components will be included.

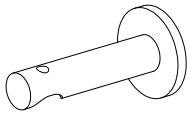

Single Over the Top Wall Mount	with AMP™ Motorization
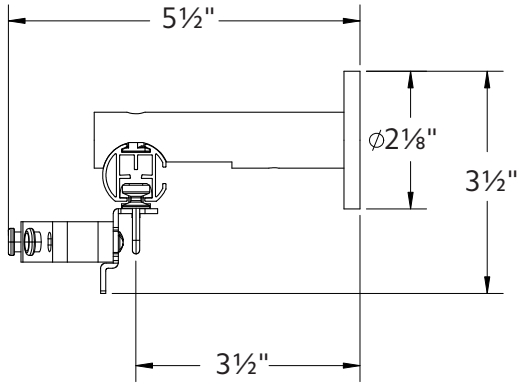	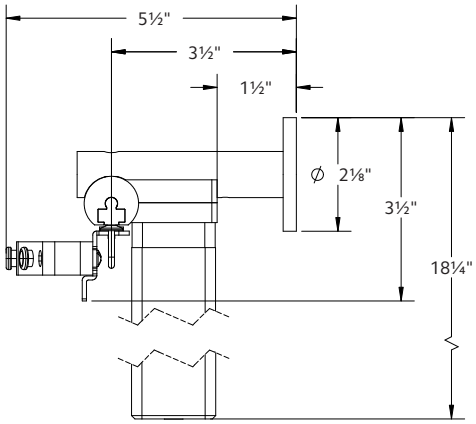

Double Over the Top Wall Mount using parts:

To achieve this look, order Hollis™ Traverse Rod, wall mount double over the top bracket and all components will be included.

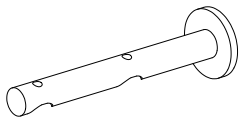

Double Over the Top Wall Mount	with AMP™ Motorization
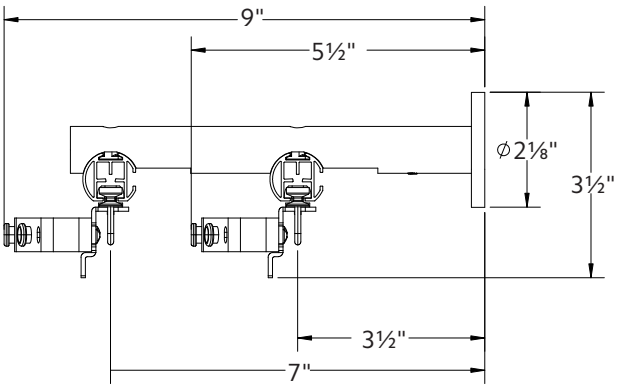	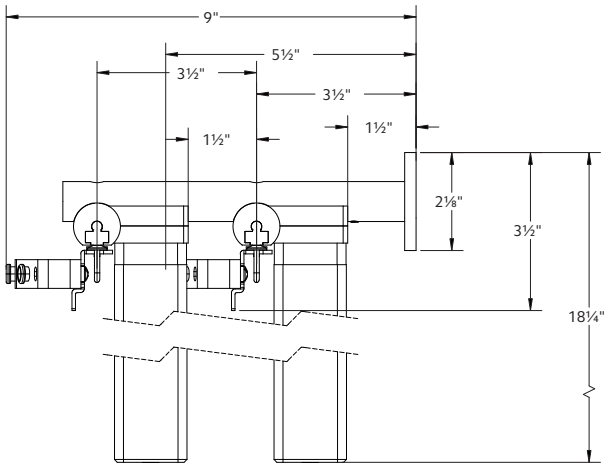

Calculating Drapery Weight

1. Fabric Weight

Some fabric samples list on the back of the swatch the weight listed in Ounces/SqYd (ounces per square yard). Call the manufacturer for the weight if not listed.

2. Lining Weight

Most drapery linings are 2oz - 4oz per square yard.

Drapery Weight Formula

Total Square Yards	= (total yards x 36 x fabric width) ÷ 1296 (1-square yard)
Weight	= total square yards x weight in ounces per SqYd) ÷ 16 oz in lb
Example	32 yards of 54" wide fabric weighing 14 oz/SqYd Total square yards = (32 x 36 x 54) = 62,208 ÷ 1296 = 48 SqYds Weight = (48 x 14oz) = 672 ÷ 16 = 42 lbs

Lining Weight Formula

Total Square Yards	= (total yards x 36 x fabric width) ÷ 1296 (1-square yard)
Weight	= total square yards x weight in ounces per SqYd) ÷ 16 oz in lb
Example	32 yards of 54" wide fabric weighing 6 oz/SqYd Total square yards = (32 x 36 x 54) = 62,208 ÷ 1296 = 48 SqYds Weight = (48 x 4oz) = 192 ÷ 16 = 12 lbs

Fabrics by Weight

Contact the fabric manufacturer for your specific fabric weight.

Fabric Type	Weight per Square Yard
Drapery Lining	2-4oz
Interlining	5-6oz
Blackout Lining	6-10oz
Bump Lining	12-14oz
Silks	2-4oz
Chintz	2-4oz
Printed Cottons	4-6oz
Linens	6-10oz
Jacquards	10-14oz
Velvets	14-18oz

1⅜" Decorative Bracket Weight Chart

Weight capacity shown is maximum per bracket when screwed into solid wood. Weight capacity is reduced when using wall anchors or screwing into other substrates.
Consult a professional for the proper screw and wall anchor for your application as many factors affect the mounting strength.

Wall Mount Bracket

Basic assembly
A) Tighten to 8 in lb
B) Tighten leveling screw

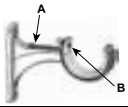

Not Extended	Extension Extended	Extension Not Extended	Extension Extended
Single Pole (1832074-1832081)		Single Pole (1832074-1832081) with extension (1832138-1832145)	
MAXIMUM: 25 LBS	MAXIMUM: 20 LBS	MAXIMUM: 20 LBS	MAXIMUM: 10 LBS
Double pole (1832106-1832113)		Double pole (1832106-1832113) with extension (1832138-1832145)	
MAXIMUM: 25 LBS	MAXIMUM: 10 LBS	MAXIMUM: 10 LBS	MAXIMUM: 8 LBS
Single pole bypass (1832090-1832097)		Single pole bypass (1832090-1832097) with extension (1832138-1832145)	
MAXIMUM: 25 LBS	MAXIMUM: 20 LBS	MAXIMUM: 20 LBS	MAXIMUM: 10 LBS
Double pole bypass (1832122-1832129)		Double pole bypass (1832122-1832129) with extension (1832138-1832145)	
MAXIMUM: 12 LBS	MAXIMUM: 10 LBS	MAXIMUM: 10 LBS	MAXIMUM: 8 LBS

Ceiling Mount Bracket

Basic assembly
A) Tighten to 8 in lb
B) Tighten leveling screw

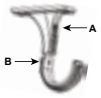

Not Extended	Extension Extended	Extension Not Extended	Extension Extended
Single pole (1832082-1832089)		Single pole (1832082-1832089) with extension(1832138-1832145)	
MAXIMUM: 25 LBS	MAXIMUM: 25 LBS	MAXIMUM: 25 LBS	MAXIMUM: 25 LBS
Double pole (1832114-1832121)		Double pole (1832114-1832121) with extension (1832138-1832145)	
MAXIMUM: 25 LBS	MAXIMUM: 25 LBS	MAXIMUM: 25 LBS	MAXIMUM: 25 LBS
Single pole bypass (1832098-1832105)		Single pole bypass (1832098-1832105) with extension (1832138-1832145)	
MAXIMUM: 25 LBS	MAXIMUM: 25 LBS	MAXIMUM: 25 LBS	MAXIMUM: 25 LBS

Pole Installation, Cutting & Splicing

Top Hole Installation Guide

This chart will position the bracket so the drapery will clear the floor approximately ½".

1. Find your pole style, size and header style in the chart.
2. Determine the desired finished drapery length.
3. Add or subtract number in the top hole column from the drapery's finished length to determine how high to measure for the top hole of the bracket.

	Rod Pocket (no top ruffle)	**Pleated** (any variety)	
	Top Hole	Top Hole	Pin Set
STATIONARY RODS			
1⅜" Decorative Wall & Bypass Bracket	-9/16"	+1⅞"	¼"
1⅜" Decorative Double & Bypass Bracket	-9/16"	+1⅞"	¼"
1⅜" Decorative O Wall & O Bypass Bracket	-⅜"	+2 9/16"	¼"
1" Decorative O Wall & O Bypass Bracket	-5/16"	+2"	¼"
1⅜" French Return	-⅜"	+2 9/16"	¼"
1" French Return	-5/16"	+2"	¼"
1⅜" Standard Bracket	-1¼"	+1 3/16"	¼"

	Pleated (any variety) **Top Hole Adjustment**				**Ripplefold™** (any fullness) **Top Hole Adjustment**
	Showing Rod	Pin Setting	Covering Rod	Pin Setting	Showing Rod (Ripplefold treatments always show rod)
DECORATIVE TRAVERSE RODS					
1" Hollis™ Traverse Rod - Hidden Wall Bracket Designer Metals™	+ 2⅜"	½"	+ 1⅜"	1½"	+ 2⅜"
1" Hollis™ Traverse Rod - Single & Double Over the Top Wall Bracket Designer Metals™	+ 2"	½"	+ 1"	1½"	+ 2"
1⅜" Estate™ Traverse Rod - Wall Bracket Designer Metals™, Wood Trends™, Wrought Iron	+ 1 11/16"	½"	+ 11/16"	1½"	+ 1 11/16"
2" Estate™ Traverse Rod - Wall Bracket Designer Metals™, Wood Trends™, Wrought Iron	+ 1 11/16"	½"	+ 11/16"	1½"	+ 1 11/16"

Cutting & Splicing Designer Metals™ Stationary Poles

- Measure to desired length and carefully wrap area with an easy peel, blue painter's tape as not to damage the finish.
- Cut through the tape with sharp fine tooth saw. Cut slowly to reduce any chipping to the product finish.
- For spliced poles, add a finial plug to the end cut.
- Splice fits inside the pole and is specific to the pole diameter.

Finial Plug

1⅜" Diameter
Part # 73405058

Splice

1" Diameter
Part # 1042812

1⅜" Diameter
Part # 73304061

KIRSCH
DRAPERY HARDWARE

Designer Metals™
inspiring brilliance

Wood Trends™
renewing traditions

Wrought Iron
forging artistry

Custom Rodding
& Basic Hardware
unique solutions

v9.26